NO. 40 NOTES FROM THE SHOP $2.50

Woodsmith®

Country Wall Cupboard

TAMBOUR UMBRELLA STAND • PLANTER STAND
FINISHING: STAINS • SHARPENING FORSTNER BITS

Woodsmith®

Number 40 **July/August, 1985**

Editor
Donald B. Peschke

Design Director
Ted Kralicek

Assistant Editors
Steve Krohmer
Douglas L. Hicks
Douglas M. Lidster

Art Director
Kay Mulder

Technical Illustrators
David Kreyling
Mike Henry

Subscription Manager
Sandy J. Baum

Subscription Assistants
Christel Miner
Vicky Robinson
Jackie Stroud
Diana Starr

Computer Operations
Ken Miner

Circulation Manager
Jeff Farris

Administrative Assistant
Cheryl Scott

Building Maintenance
Archie Krause

WOODSMITH (ISSN 0164-4114) is published bimonthly (January, March, May, July, September, November) by Woodsmith Publishing Co., 2200 Grand Ave., Des Moines, Iowa 50312.
WOODSMITH is a registered trademark of the Woodsmith Publishing Co.
©**Copyright 1985** by Woodsmith Publishing Co. All Rights Reserved.
Subscriptions: One year (6 issues) $10, Two years (12 issues) $18. Single copy price, $2.50 (Canada and Foreign: add $2 per year.)
Change Of Address: Please be sure to include both your old and new address.
Second class postage paid at Des Moines, Iowa.
Postmaster: Send change of address notice, Form 3579, to Woodsmith Publishing Co., 2200 Grand Ave., Des Moines, Iowa 50312.

BACK ISSUES

All back issues of *Woodsmith* are still available. Send for a free booklet describing the contents and prices of all back issues.

SAMPLE COPIES

If you have a friend who would like to see a copy of **Woodsmith**, just send the name and address, and we'll send a sample (at no cost).

Sawdust

SHARP. A couple of weeks ago I was helping a friend set up and sharpen a brand new jack plane. As he took it out of the box for the first time, he was a little surprised when I looked at it and said, "Boy, this is going to take a lot of work."

"It's brand new," he argued, "why should it need a lot of work?"

The problem is that we usually think of "new" meaning that something is in the best condition possible. Everything from there on just wears it out.

But with woodworking tools (especially hand tools), just the opposite is true. A new tool usually needs a lot of work — especially if it's one that has (or is supposed to have) a sharp edge. Plane irons, chisels, and carving tools all need to be sharpened when they're new. And this task continues as long as the tool is used.

Okay, I've made my case for sharpening — albeit not a very controversial one, especially when we're talking about planes and chisels. But how about Forstner bits?

This is one tool most of us would never dream of sharpening. The first one I bought cost $15 (for *one* ½" bit). And all it took was one look at the business end to convince me that there's no way to sharpen a Forstner bit. Even if it could be done, it would certainly require an expensive array of machine shop equipment.

So, the only alternative was to assume that "new" in this case meant that the bit was the best it was going to be. And when it got dull, I would just have to toss it.

Wait a minute. Throw away a $15 bit just because it's dull. No way.

That's when I decided to learn how to sharpen Forstner bits. (See page 4.) It didn't take long before I discovered that a Forstner bit is relatively easy to sharpen.

And then comes the fun part. Just like working on a plane and seeing the first crisp shavings, it's a thrill to see the long ribbon of shavings that emerges from a well-sharpened Forstner bit. In fact, it's *better* than new.

STAINS. It's obvious that I can get excited about sharpening. But the subject of another article in this issue — working with stains — is one I've never been too interested in.

Part of it is that I like natural wood. Stain always seems artificial. But the other part is that I never knew what to do with a stain if I didn't like the particular tone or color. The big question for me was: How do I get the color I want?

It turns out that the answer is not much different that the answer for how to sharpen a Forstner. All it takes is some experimenting.

It's messy, and the ends of your fingers turn a lot of different colors, but mixing your own stain is an interesting process. The article starting on page 19 gives an overview of the different types of stains available. Then in Talking Shop (page 23) of this issue, we give a formula for making your own home brew. It opens a lot of possibilities for coloring wood.

This article continues our series on finishing. We're already at work on the upcoming articles on top coats: varnish, shellac, and urethane.

TAMBOURS. While I'm on the subject of discovering new ways to doing things, I found a new use for a tambour. Although the typical application is to use it as a sliding lid (as on a roll-top desk), it does have at least one other interesting application.

I used a tambour to form a cylinder to build the umbrella stand and planter stand shown in this issue. (See pages 6 and 10.) (By the way, in case you're wondering about the word "bumbershoot" in the subtitle on page 6, it's English slang for umbrella.)

SOURCEBOOK. Last year in September, we sent out the first edition of the *Woodsmith Sourcebook*. The response to that first effort was overwhelming — more orders were placed than we (or the advertisers) thought possible. Which indicates one thing: the *Sourcebook* proved to be a useful guide to the information that's available on woodworking catalogs, tools, and supplies.

This year, we're doing an encore with the *Sourcebook*. It will be mailed out the end of August so you should receive it by the middle of September.

For those of you who have subscribed to *Woodsmith* recently, the *Sourcebook* may come as a surprise. Almost everyone likes the fact that the pages of *Woodsmith* aren't cluttered with a lot of ads.

On the other hand, many of our subscribers miss some of the information that advertising provides. So, we initiated the *Woodsmith Sourcebook* to provide a single source for ordering catalogs and product information.

Inside this year's *Sourcebook* you'll find descriptions of 43 woodworking catalogs and products. Yet, the pages of *Woodsmith* magazine stay just the way everyone likes them — advertising free.

I hope you find the *Sourcebook* helpful in providing the information you need to buy shop tools and supplies.

NEXT MAILING. The September/October issue of *Woodsmith* (No. 41) will be mailed during the week of October 15, 1985.

Tips & Techniques

NO-CLAMPS FEATHERBOARD

Fumbling with clamps to fasten a featherboard to a saw table always seemed like a lot of trouble to make one cut. Recently I built this no-clamps featherboard to solve the problem. It's an ordinary featherboard with a thin guide bar fastened to the bottom that mounts in the table saw's miter gauge slot.

I began by making a featherboard out of 5/4 stock. Overall, mine is 5″ wide by 18″ long and has a 45° cut on the feathered end. The individual barbs of the feather are 3/16″ wide by 3″ long.

After the "feather" end is cut, rout two ¼″-wide by 6″-long adjustment slots all the way through the featherboard. The slots are 2½″ apart and start 1″ from the barbs.

Next, cut a guide bar to width and thickness so it fits precisely in the miter gauge slot of your table saw. Make it at least as long as the entire table for now — later it's cut to 12″.

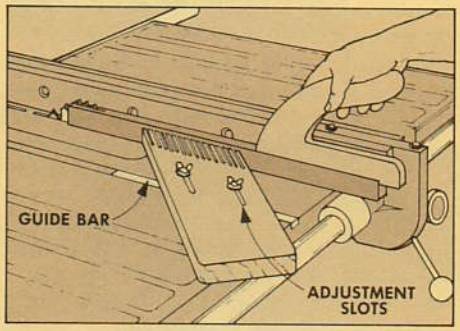

After cutting the guide bar to fit the slot, clamp the bar to the bottom of the featherboard. Line it up parallel with the feathered end (that is, at a 45° angle to the edge) and over the adjustment slots.

Using the slots as a gauge, mark their locations on the guide bar with an awl. Unclamp and drill a ½″-dia. countersink and ¼″-dia. hole centered on the guide bar at each marked location.

After the two holes are drilled, cut a ⅛″-stopped slot (kerf) centered on the holes all the way through the guide bar. To do this, clamp the piece down to the saw table so it's width is centered right over the blade. Then slowly raise the blade until there's an 8″ long slot. Finally, the bar can be cut to 12″ long.

Assemble the featherboard with a couple 2″-long, ¼″-dia. flathead machine screws, washers, and wing nuts. Tightening the wing nuts causes the screws to slide up into the countersink. As they slide up, the ⅛″ slot is opened and spreads the bar to hold it securely in the miter gauge slot.

One problem I discovered was that the screws twisted rather than tightened as I turned the wing nuts. I solved this by cutting the slot in the top of each screw a

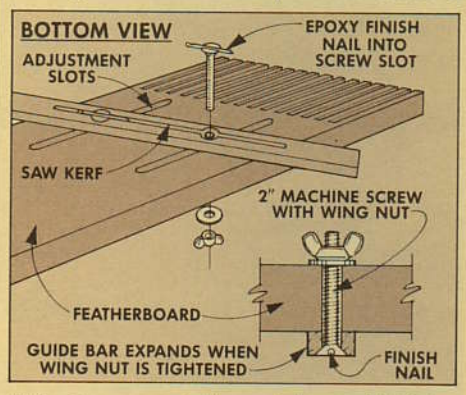

little deeper and then gluing a finishing nail into the slot with epoxy.

Robert K. Graul
Alton, Illinois

MITERING SMALL STOCK

I've made a number of projects that require ¼″ quarter-round moldings as glass stops. These usually require a precise miter. It's difficult to hold the small moldings tight and in the correct position on a table saw or traditional miter box.

My solution was to make a miniature miter box. The work surface is a piece of 4/4 stock with a ¼″-wide x ⅜″-deep groove cut down the center to hold the molding. (These measurements could be altered to fit the piece to be mitered).

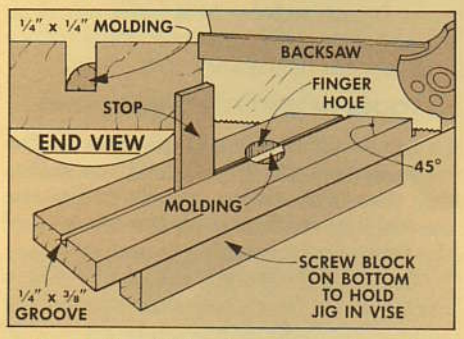

To cut the 45° kerf in the work surface, first lay it out with a pencil. Then clamp a temporary guide board to the line and cut with a backsaw along the board until there's a ½″-deep kerf in the work surface.

Next flip the piece over and drill a 1½″-dia. finger hole centered on the groove and about 3″ from the kerf. The hole makes it easier to hold and remove the workpiece and helps clear out sawdust between cuts.

Then screw a block to the bottom of the jig to clamp it in a vise. Finally, cut a piece of scrap as a stop that's just thick enough to wedge in the groove.

Wendell Anderson
Homewood, Illinois

CLEANING UP NOTCHES

Since I don't own a bandsaw, I used my sabre saw to cut out the notches in the top and bottom pieces when I was building the English Wall Lantern (*Woodsmith* No. 36). But I wasn't able to get an even, smooth edge. The router table solved the problem.

After making ½″-wide, full-depth end cuts on the table saw, mark a cut-off line about 1/16″ less than the full depth. Then cut along this line with a sabre saw.

Next, mount a ¼″ straight bit on the router table and raise it up until it's above the thickness of the workpiece. Set the distance from the fence to the outside of

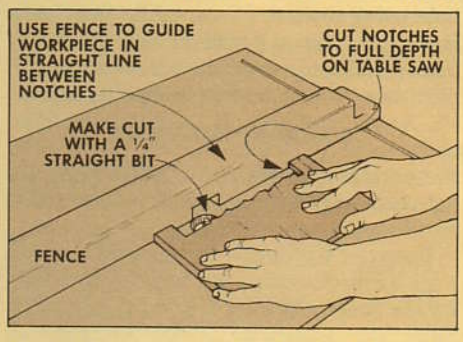

the bit the same as the depth of the table sawn notches. This should be just deep enough to clean off the 1/16″ and straighten up the uneven edges.

Tim Drain
Woodland, Washington

Editor's Note: We tried Mr. Drain's method and it works fine. But we'd like to add a couple cautions: Be careful not to start and stop the cut too far into the table sawn notches so as to gouge the corners. (Stop blocks could be attached to the fence to prevent this). And with the English Wall Lantern, the cut is being routed in end grain. Be sure to hold on securely as a router bit may "grab" the end grain.

SEND IN YOUR IDEAS

If you'd like to share a woodworking tip with other readers of *Woodsmith*, send your idea to: *Woodsmith*, Tips & Techniques, 2200 Grand Ave., Des Moines, Iowa 50312.

We pay a minimum of $10 for tips, and $15 or more for special techniques (that are accepted for publication). Please give a complete explanation of your idea. If a sketch is needed, send it along; we'll draw a new one.

Sharpening: Forstner Bits

HOW TO GET A SHARP EDGE ON A BORING BIT

Forstner bits can do things no other bit can do. For example, if you want to drill a hole at an angle (even a very steep angle), a Forstner bit will do the job.

If you want to drill overlapping holes (for roughing out a mortise, for example), a Forstner bit is the one to choose. Or, if you need to drill a flat-bottomed hole, or if you have to drill into end grain or wild grain . . . you guessed it.

The reason Forstner bits can accomplish these tasks when other bits can't is because the rim, rather than the center point, guides the bit through the wood.

Although there is a small center point in the cutting head, it's used only to position the bit at the starting location. It plays no role in guiding the bit through the wood.

The rim scores the circumference of the hole being drilled. Then, while the rim is holding the bit in position, two chisel-like lifters (radiating from the center of the bit) pare away the wood with a planing action.

A HEAT-SENSITIVE BIT

But with all it's abilities, Forstner bits are not without problems. The most serious is its tendency to overheat.

Forstner bits were developed for use in a bit brace (hand brace), and not intended for the speed of a motor-driven drill press. Since the entire rim of the bit is in full contact with the wall of the hole, Forstner bits must be run at slow speeds (less than 400 rpm) or they will overheat.

If the bit is run too fast, a tremendous amount of heat will be built up as the rim rubs against the circumference of the hole. This heat can draw the temper from the steel very quickly. (If the steel turns blue, the temper is drawn.)

Once the temper is drawn, the rim will be too soft to hold a sharp cutting edge. Then it's usually *forced* into the wood, or the speed is increased to *make* it cut, which just ruins the bit.

Another problem with Forstner bits is that they're very poor at ejecting wood chips, especially when they're not sharp. The ejection throats tend to clog and then it's difficult to feed the bit into the wood.

When this happens, the most common solution is to "jog" the bit — drill a little, lift up, drill a little more, lift up. If the clogging is really bad, you have to stop the drill press and use an awl or small nail to clear the ejection throats.

But, there's a better solution. Forstner bits clog for one reason: they're not sharp. In fact, even a brand new bit isn't as sharp as it should be.

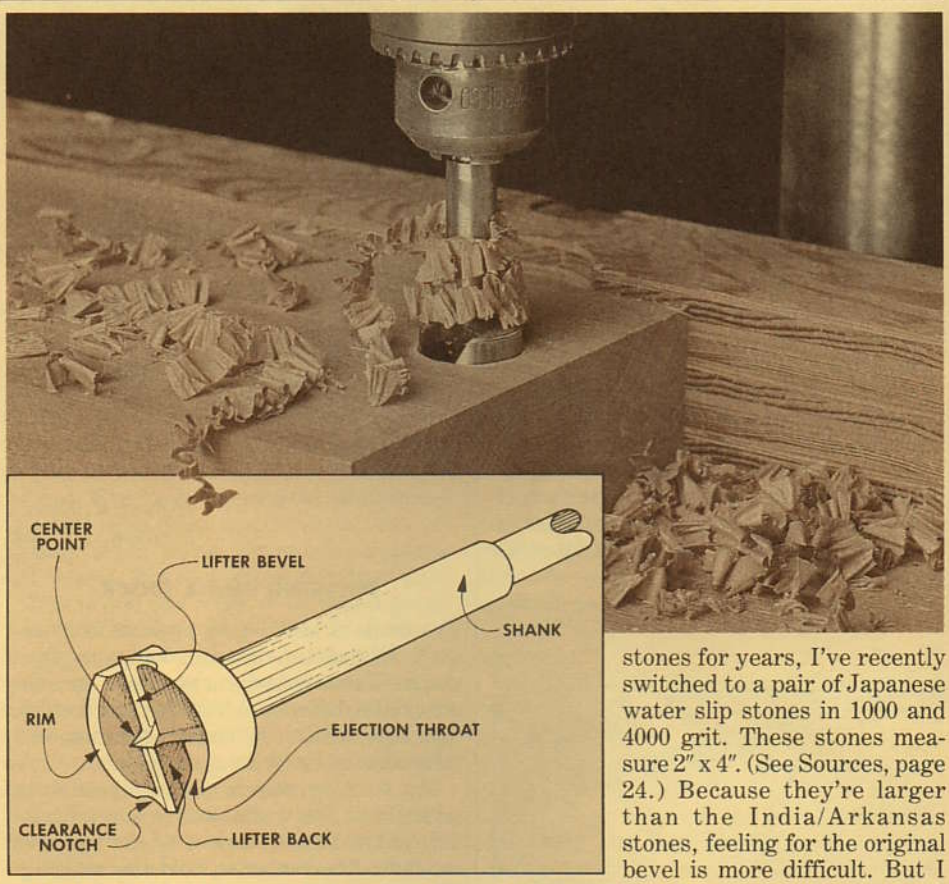

If the bit is sharpened, it will *slice* through the wood with very little resistance (which reduces heat build-up). And instead of clogging, it will actually produce long ribbons of shavings, see photo.

TOOLS NEEDED FOR SHARPENING

However, all it takes is one look at the business end of a Forstner bit to realize that there's no way to sharpen it. The rim can only be reached from the inside, and the lifters are impossible to get to.

Okay, it's no secret that sharpening a Forstner bit is trickier than sharpening other edged tools. But it can be done. And with the help of a few tricks and the right equipment, it's really pretty easy. I use two small carver's slip stones (medium and fine), and a simple jig to hold the bit.

SLIP STONES. The slips I use are made for sharpening carving tools: a small (⅞" x 2¼") medium-grit India and a hard Arkansas make a nice combination for sharpening Forstner bits. (See Sources, page 24.) The India is used in the initial stages to rough down the edge, and then the hard Arkansas is used to hone the edge.

Although I've used the India/Arkansas stones for years, I've recently switched to a pair of Japanese water slip stones in 1000 and 4000 grit. These stones measure 2" x 4". (See Sources, page 24.) Because they're larger than the India/Arkansas stones, feeling for the original bevel is more difficult. But I find myself putting up with this inconvenience because the Japanese stones cut faster and produce a better edge.

HOLDING JIG. To help hold the Forstner bit at the proper angle when using the stones, I use a simple holding jig. This jig isn't fancy, it's just a piece of scrap with a hole the size of the bit shank, see Fig. 1.

Shop Note: Cut a kerf through the hole so when the jig is placed in a vise, the amount of pressure on the bit can be adjusted by loosening or tightening the vise. This will allow the bit to spin free or be held securely in the hole.

SHARPENING THE LIFTERS

Once the sharpening equipment is collected, I start working on the lifters.

SHARPEN LIFTER BACK. The back of the lifter has to be flat and smooth before the bevel can be sharpened. The first step in flattening the back requires getting the bit into position so the back of the lifter can be reached comfortably, see Fig. 1.

I find that securing the jig in a vise so the bit is parallel to the floor and pointing to the left feels comfortable. This puts the back of the lifter in line with my arm for a

natural back-and-forth sharpening motion.

Once the throat is lined up comfortably, start with the medium-grit stone to smooth the back. Rock the stone on the back of the lifter until it rests flat. Then stroke back and forth, see Fig. 2. The key is to be consistent in the stroking motion.

Keep stoning until the backs of both lifters look smooth and flat. Then switch to a fine honing stone and go through the same procedure.

SHARPEN LIFTER BEVELS. When both lifter backs are flat and mirror smooth, the lifter bevels can be sharpened. At first, it may look like this part of the lifter is impossible to get to. But there's a small clearance notch in the rim right next to the lifter. This notch allows enough clearance for the stone to rest flat on the lifter bevel.

To sharpen the lifter bevel, I begin by clamping the jig in the vise so the bit is held almost upright, see Fig. 3. Then place the medium-grit slip stone on the bevel and feel for the original angle.

When you find the angle, rub the stone back and forth. (Although it looks like you'll run into the rim as the slip stone is stroked, the angle of the lifter is such that the stone is actually guided up and away from the rim, see Fig. 3.)

After one lifter is stoned, rotate the bit and stone the opposite lifter. Then repeat the process with the fine stone to hone the lifters to a sharp edge.

REMOVE THE WIRE EDGE. As the lifter bevel is honed, a wire edge is raised on the back (flat) side. To remove the wire edge, position the jig and bit as they were when flattening the back, see Fig. 1. Then very lightly rub the fine honing stone across the back to hone off the wire edge.

SHARPEN THE RIM

The next step is sharpening the rims. If the bit is in really bad shape, or has sloppy grinding from the factory, the inside contour of the rim has to be shaped before it can be sharpened. This requires a rather unorthodox technique.

I scrape the edge with the sharpened edge of a triangular file. To do this, lightly grind the three sides at the tip of the file to make three sharp cutting edges. Because the file steel is considerably harder than the Forstner bit, this tool will actually shave the metal.

Now hold the bit in one hand and use a sharp corner of the file to make several smooth strokes along the entire rim, see Fig. 4. It's easier than it sounds to carve the inside bevel to a smooth shape.

STONING THE RIM. The technique I use to sharpen the rim is to rotate the bit against the rounded edge of the slip stone. Put the bit in the jig, and clamp the jig in a vise so it's roughly at a 45° angle. Make sure the bit is free to pivot.

Now place the round edge of the slip stone on the inside bevel of the rim, see Fig. 5. To get a consistent honing angle, slide the end of the stone in so it rests on the bit's center point.

Now it's just a matter of holding the stone steady and rotating the bit so the entire edge of the rim rubs against the edge of the slip stone. Just spin the bit with your fingers.

When the inside of the rim is uniformly smooth, repeat the process on the opposite rim. Then switch to the fine stone to hone both rims smooth.

REMOVE WIRE EDGE. The last step is to remove the wire edge from the outer surface of the rim. This takes just a second. Hold the face of the stone flush against the side of the bit and rotate the bit against the stone, see Fig. 6.

Make sure the stone is flat on the rim of the bit. You don't want it to tilt in and create a negative bevel on the outside of the rim. (If the cutting edge is beveled in, it will cut a circumference smaller than the rest of the rim — so the bit won't feed.)

TEST THE EDGE. Once the bit is sharp, the final test takes place on the drill press. Set it for the slowest speed possible and find a piece of scrap to bore a test hole.

The bit should *slice* a hole smoothly without clogging. If it's really sharp, the bit will cut a continuous strip of shavings — even in maple as shown in the photo. Now, how could anyone call that boring?

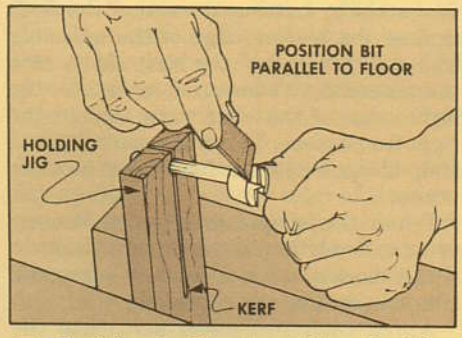

1 *Position the Forstner bit so the lifter back is vertical and the ejection throat is parallel to a natural stroking motion. Thumb pressure steadies bit.*

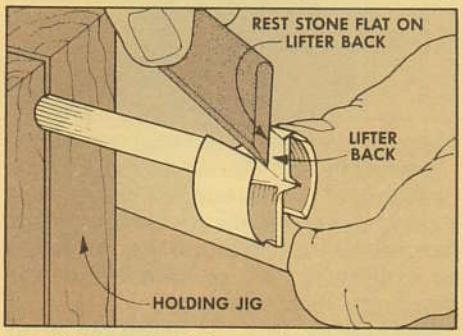

2 *Flatten the lifter back by stroking the stone flat against the surface. Continue till all tool marks are gone, then hone to mirror finish with fine stone.*

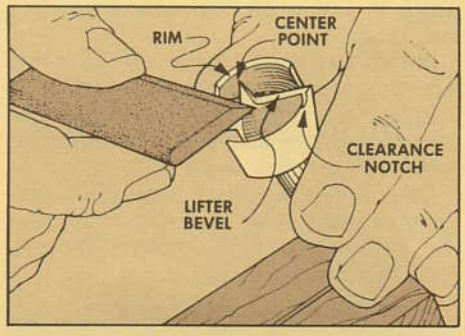

3 *Sharpen the lifter bevel by stroking the stone while maintaining the original bevel. Clearance notch allows access without endangering rim edge.*

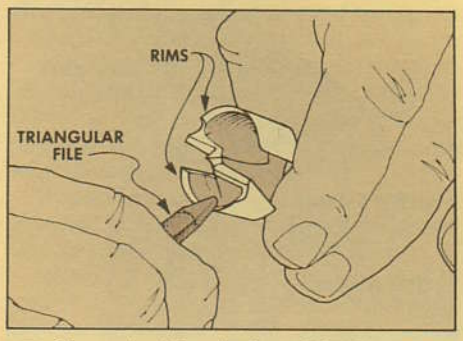

4 *Shave inside of rim with sharpened end of triangular file to uniform angle. Rotate file and bit in opposite directions to scrape a smooth bevel.*

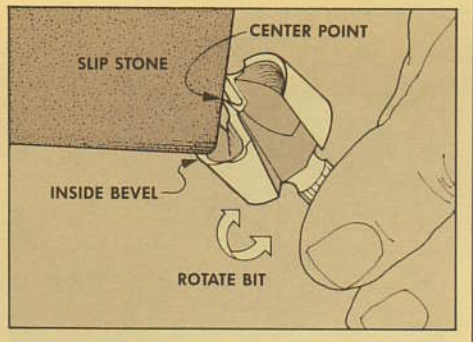

5 *Sharpen inside of rim by rotating the bit (held loosely in the jig) against the edge of the stone. Use the centerpoint to pivot the bit on the end of the stone.*

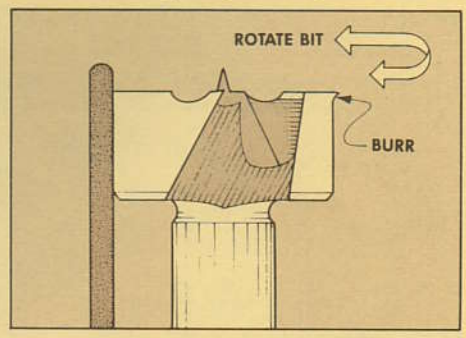

6 *Remove the wire edge raised when sharpening the rim by rotating the face of the rim lightly against the stone. Be careful not to hone a negative bevel.*

Umbrella Stand

BUMBERSHOOT BIN

The column of this umbrella stand is an adaptation of the tambour used in roll-top desks — it's simply a series of straight slats fastened to a flexible back. On previous projects, I used canvas for the backing. However, since the inner surface is visible on the umbrella stand, I decided to use flexible veneer (see Sources, pg. 24) rather than canvas for the backing.

THE STRIPS

I started by cutting the strips needed to make the column. You need only 20 strips, but I made a few extra, just in case. To make the strips, start with 12 pieces of 4/4 stock 1¼" wide by 24" long. Then resaw (rip on edge) these pieces into strips 5/16" thick, see Fig. 1.

RESAWING THE STRIPS. When resawing the strips, I centered the blade precisely so I could cut two strips in one pass, see Fig. 1. (Depending on the thickness of the stock you start with, the strips may turn out thicker than 5/16". That's okay.)

Shop Note: To resaw the strips accurately (and safely) use a featherboard to hold the strip firmly against the fence. (See page 3 for a tip on making this featherboard.)

ROUND THE EDGES. After all the strips have been resawn to thickness, cut them to final length of 22¾". Then the outer edges are rounded over with a ¼" round-over bit on the router table, see Fig. 2.

Shop Note: The strips are so thin that the pilot won't guide the bit. Instead, use the fence to control the width of the cut, see Cross Section in Fig. 2.

MAKE THE TAMBOUR

After all the strips have been rounded, they can be glued to the veneer. However, keeping everything lined up and absolutely square is critical. I used a layout frame to keep the strips lined up.

LAYOUT FRAME. The layout frame is just two straight boards clamped or tacked at right angles to one another on a work surface, see Fig. 3. It's critical that the corner be exactly 90°, so recheck before the boards are clamped down.

CUT VENEER. Now the veneer can be cut to size using a knife and straight edge. First cut it to length to equal the length of the strips (22¾"). (Note: The grain on the veneer runs the same direction as the strips.) Then cut the veneer to width to equal the combined width of the strips (20 times 1¼" equals 25") plus 2" for trim, or a total of 27".

The starting edge should be trimmed to a right angle before applying the contact cement. To trim the edge, butt the long edge of the veneer against the bottom edge of the layout frame. Place a framing square on the right edge and trim with a knife.

APPLY CONTACT CEMENT. When the veneer is square, contact cement can be applied to the veneer back and the backs of the strips. Apply two even coats of contact cement. As the cement is brushed on the strips be careful it doesn't run down on the edges of the strips. (You don't want the edges to stick together when the cylinder is formed.)

ASSEMBLY. Now the strips can be assembled to the veneer. Begin the assembly process by putting the veneer face down in the corner of the assembly frame. (I put a couple of small pieces of double-faced tape on the table surface to keep the veneer from shifting.)

APPLYING THE STRIPS. Now, apply the first strip by butting the end of the strip against the bottom edge of the assembly frame and "tipping" the strip down onto the veneer. As it's lowered, make sure the right edge of the strip rubs against the right frame piece. This will ensure the first strip is square just before it contacts the veneer.

When the strip contacts the veneer, press it firmly in place and pound it down with a block of wood and hammer for good adhesion on the entire surface.

Apply each successive strip like the first, making sure the end is butted tightly against the bottom edge of the assembly frame, and the right side of the strip is tight against the previous strip.

FIGURE 1

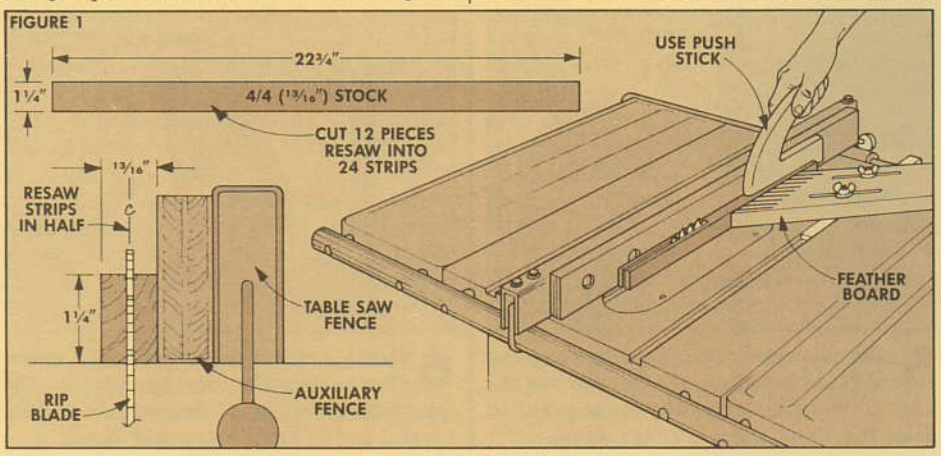

FIGURE 2

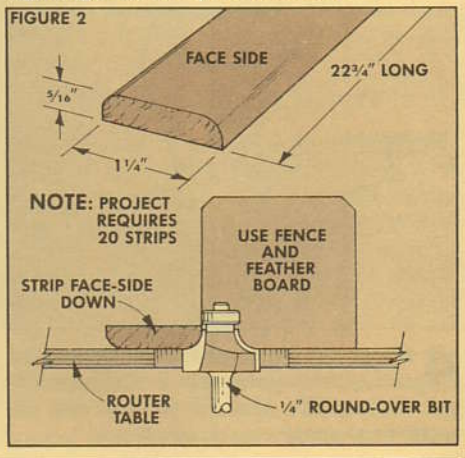

After several strips are positioned, check for square, see Fig. 4. Continue to check periodically and if the strips are getting out of line, increase the spacing ever so slightly. The key is to make sure the last strip is parallel with the first. (These two will meet when the cylinder is formed.)

THE GLUE FLAP. When 20 strips are in place, there should be an extra flap of veneer left over. This flap is trimmed to form a glue flap.

Remove the tambour from the layout frame and place one of the extra strips (that doesn't have contact cement on it) tight against the last strip, see Fig. 5. With a sharp knife, trim off the excess veneer leaving a glue flap that's exactly as wide as one strip (1¼").

RABBETTING THE ENDS. To complete the tambour, the top and bottom edges are rabbetted to produce a 5/32"-thick tongue to fit into grooves in the top and bottom rings of the umbrella stand, see Detail in Fig. 6.

The flex of the tambour presents a little problem so it helps to use a featherboard to hold the ends down tight against the table. Also, use a dado blade to cut the rabbet in one pass, see Fig. 6.

SAND TAMBOUR. After rabbets are cut on both ends, sand the tambour and it's ready for final assembly into a cylinder.

FORM THE CYLINDER

To form the tambour into a cylinder, the glue flap is fastened to the back (veneer side) of the tambour, refer to Fig. 8. The glue flap already has contact cement on it, so just the veneer side on the opposite end has to be coated.

To do this, mark the width of the glue flap on the back (veneer side) of the tambour. Then apply masking tape to the edge of this line, and apply contact cement to this area, see Fig. 7. When the cement is dry, the masking tape can be removed, and the tambour is ready for assembly.

ASSEMBLY. To form the cylinder, lay the tambour down with the glue flap to the far side. Then roll the tambour into a cylinder, being careful to bend the glue flap toward the inside of the cylinder, see Fig. 8.

Butt the edges of the first and last strips tightly together, making certain the ends line up properly. Be very careful not to let the glue flap down until the edges are aligned. (It helps to have someone else hold the edges tightly together.)

When the edges are aligned, press the glue flap against the contact cement on the veneer surface to form the cylinder.

MEASURE THE DIAMETER. In order to make the top and bottom rings to complete the umbrella stand, you have to know the rough inside diameter of the cylinder. Place a basketball in one end of the cylinder to force it into a circle. Then you can measure the rough diameter.

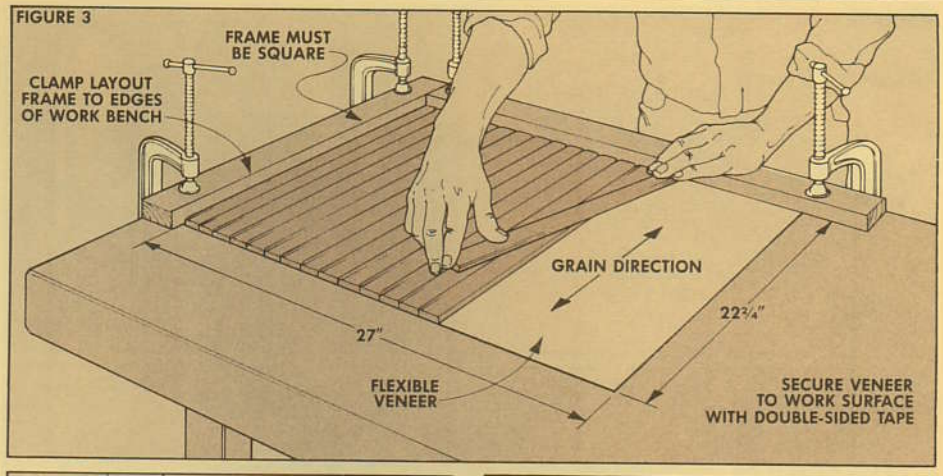

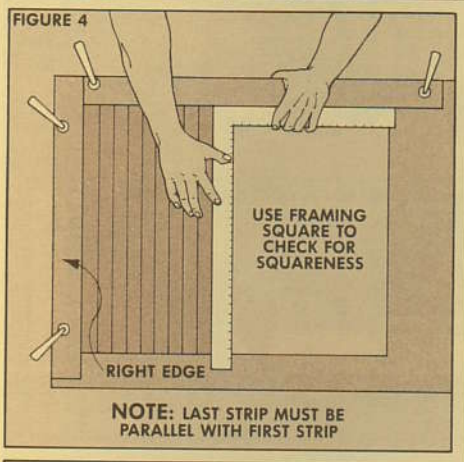

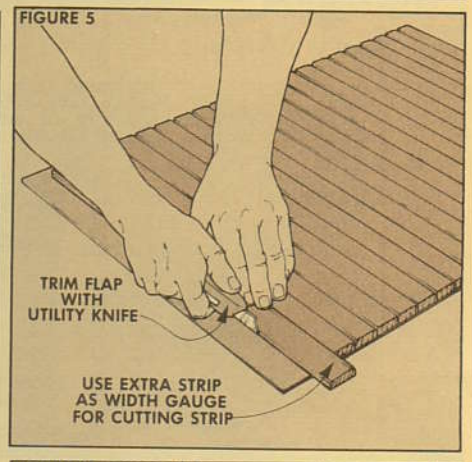

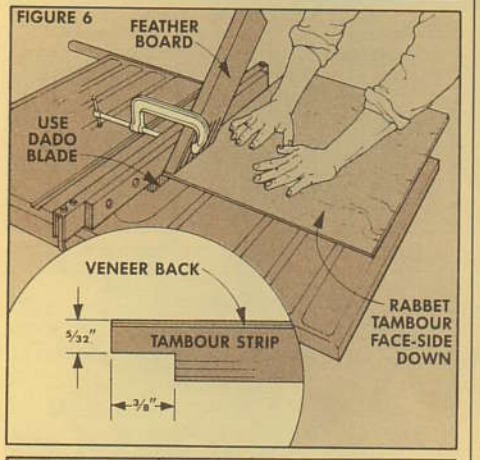

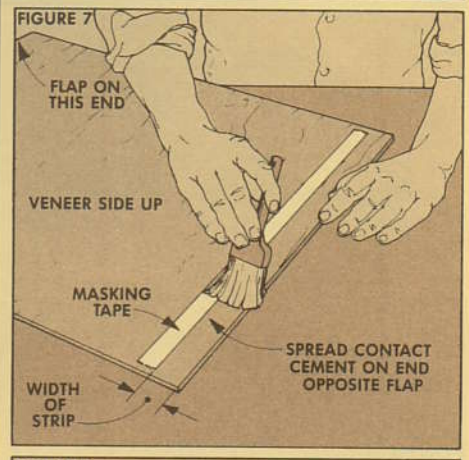

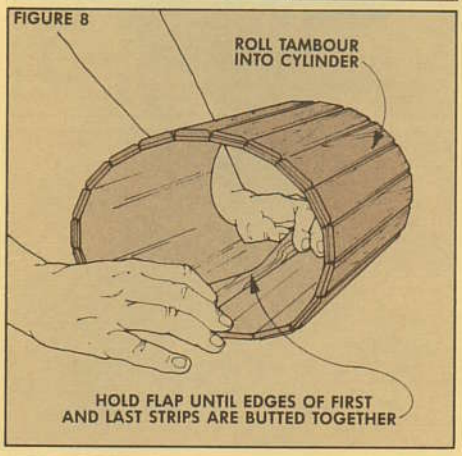

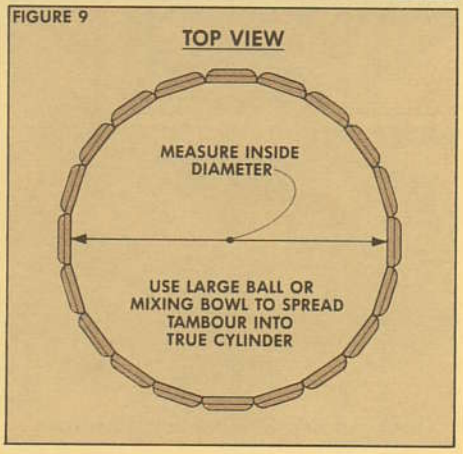

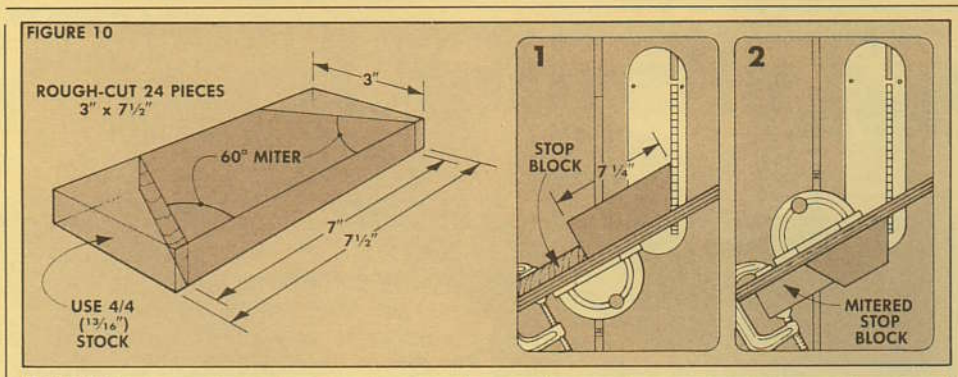

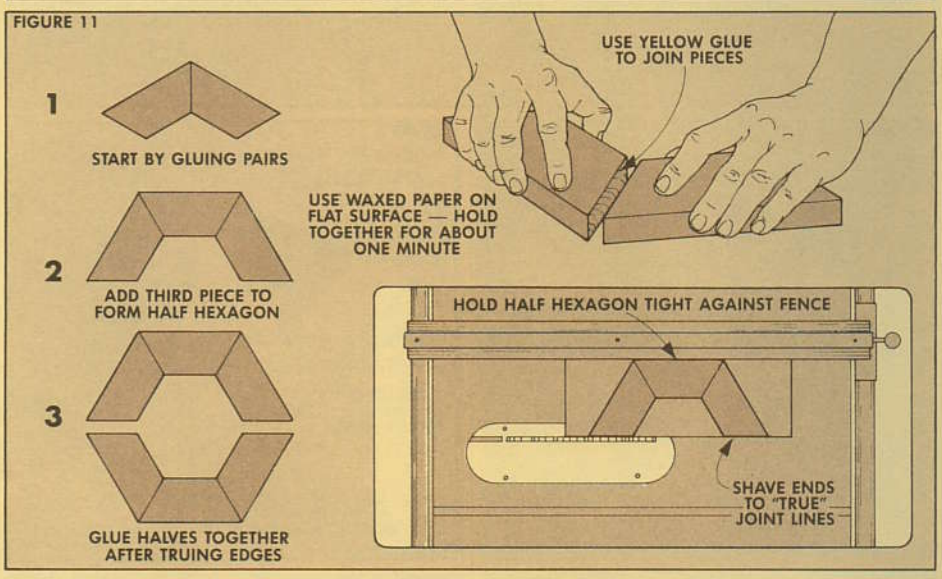

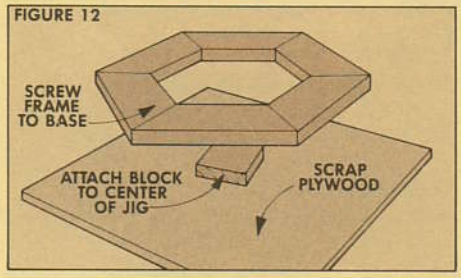

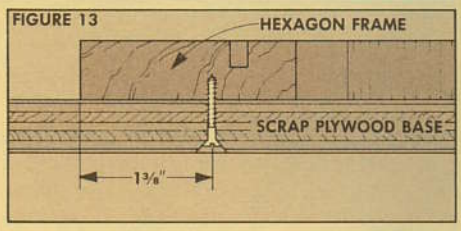

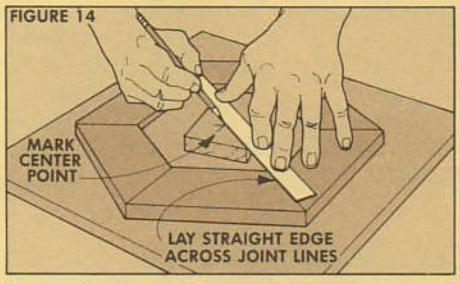

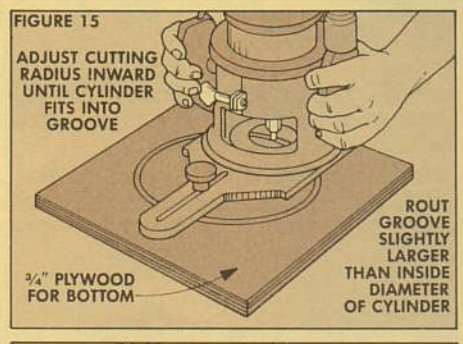

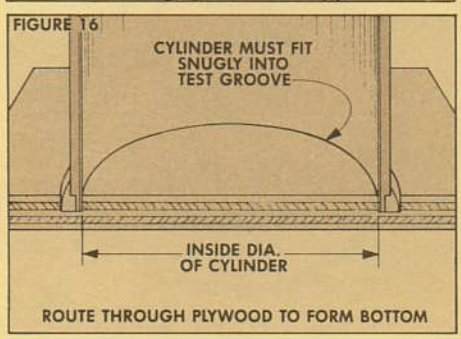

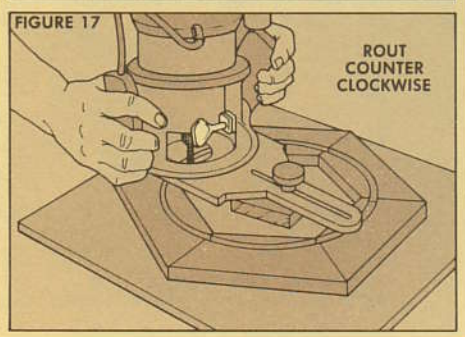

MAKE THE RINGS

Once the tambour cylinder is complete, the top and bottom rings can be made. There are actually four rings (two for the top and two for the bottom), refer to Fig. 21. Each of these rings starts out as a hexagonal (six-sided) frame.

MITER THE STOCK. To make the segments for the four hexagons, start with 24 pieces of 4/4 (3/16") stock 3" wide by 7½" long, see Fig. 10. Then cut a 60° miter on both ends of each piece so the final length (from point to point) is 7".

To do this, first miter one end of all 24 pieces to a rough length of 7¼" (to the point of the miter), see Step 1 in Fig. 10. Then reverse the miter gauge in the slot to miter the other end, see Step 2. (This way you don't have to change the setting on the miter gauge.)

Use a mitered stop block to hold the mitered end of each block in place to cut the second miter so the point-to-point length is 7".

MAKE HALF-HEXAGONS. After all the blocks are cut, they're glued together to form hexagons. The secret to making hexagons with tight-fitting joints is to make half-hexagons first.

Start by gluing pairs of hexagon sections together. Place a piece of waxed paper on a flat work surface and hold the pair down flat on the work surface while pressing the ends tightly together for about a minute (hand pressure is enough), see Fig. 11. Glue up eight pairs like this, and then add a third section to each pair to form a half-hexagon.

TRUE THE EDGES. When the glue is dry, true the edges on the table saw. To do this, mount the half-hexagon to a piece of plywood (screwing from the bottom side) and shave the ends to form a straight line, see Detail in Fig. 11. Then glue the opposing half-hexagons together.

MAKE ROUTING JIGS

After the four hexagons are formed, they're routed into circles. To do this, mount each hexagon to a plywood base. (I mounted each hexagon to its own base so I could make duplicate cuts without having to reset the router each time.)

FASTEN THE HEXAGON. Fasten the hexagons to the plywood bases with three screws, drilling from the underside of the base. Locate the screws 1⅝" from the outside edge so the points won't project into the bit's path, see Fig. 13.

MARK THE CENTER. Also, mount a piece of scrap to serve as a center for the trammel point attachment, see Fig. 12. Then to locate the centerpoint for the trammel, lay a straight edge across the joint lines and draw three intersecting lines on the block, see Fig. 14. Drill a hole at this point for the trammel point.

ROUT GROOVE

When the jigs are set up, the first step is to rout a ¼"-wide groove for the rabbetted edge on the top and bottom of the column, see Step 1 in Fig. 18. The trick is to find the exact diameter for the groove to hold the rabbeted ends of the cylinder.

TRIAL CUT. The procedure I used was to rout a test groove in a piece of ¾" plywood. Set the trammel attachment to cut a circle slightly larger than the inside diameter of the column, see Fig. 15. Then make a trial cut in a piece of plywood. Reduce the diameter and rout another pass until the cylinder fits snugly into the groove, see Fig. 16.

THE BOTTOM. When I had the final radius setting, I made several more successively deeper passes in the plywood until a full circle was cut out of the plywood. This circle is used later as the bottom of the umbrella stand.

ROUT THE GROOVES. With this same radius setting on the trammel attachment, rout ⅜"-deep grooves in the two middle hexagons, see Fig. 17.

ROUT INTO RINGS. Now all four hexagons can be routed into rings. To cut the inside diameter of the rings, set the trammel attachment to rout a radius ¼" less than the radius of the groove for the rabbets. (This should be about 3¾".)

Rout a groove at this setting in all four hexagons, see Step 2 in Fig. 18. Then progressively lower the bit to deepen the groove until the center is freed.

THE OUTSIDE DIAMETER. To complete the rings, the outside edge of the hexagons is routed to three different diameters, see Step 3 in Fig. 18. The cap ring is 10½", the two middle rings are 10", and the base ring is 11¼" in diameter.

PROFILE THE EDGES

When all the rings are cut to size, remove them from the jigs so the edges can be routed on the router table. I used the bits shown in Fig. 21 to rout profiles on the outside edge of each ring.

Shop Note: To support the ring while routing the profiles, I attached an auxiliary fence at right angles to the router table fence, see Figs. 19 and 20.

GLUE THE RINGS TOGETHER. After routing the profiles, apply glue to the inner surfaces of each ring and clamp the pairs together. For strength, make certain the joint lines (of the hexagons) *don't* line up on both rings (jog them about ¾").

FINAL ASSEMBLY. Before gluing the rings to the cylinder to form the umbrella stand, insert the plywood bottom into the cylinder. Then, glue the rings onto the rabbetted ends of the cylinder.

FINISH. When the glue was dry, I finished this stand with two coats of Minwax Early American stain, and two coats of Hope's Tung Oil Varnish.

FIGURE 18

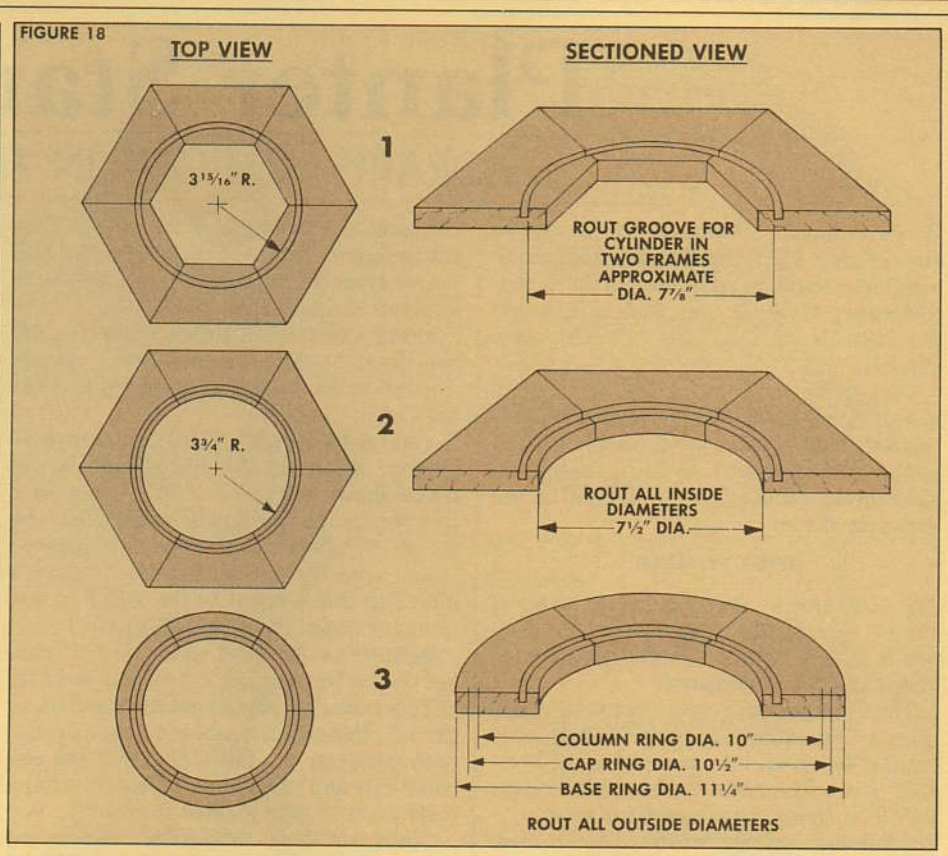

FIGURE 19

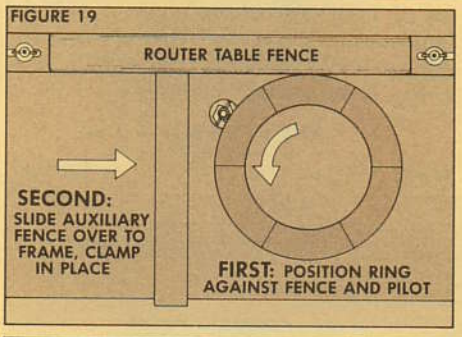

FIGURE 20

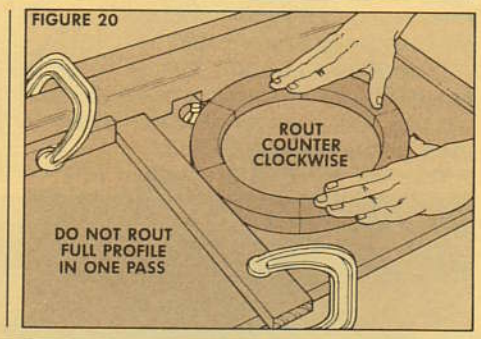

FIGURE 21

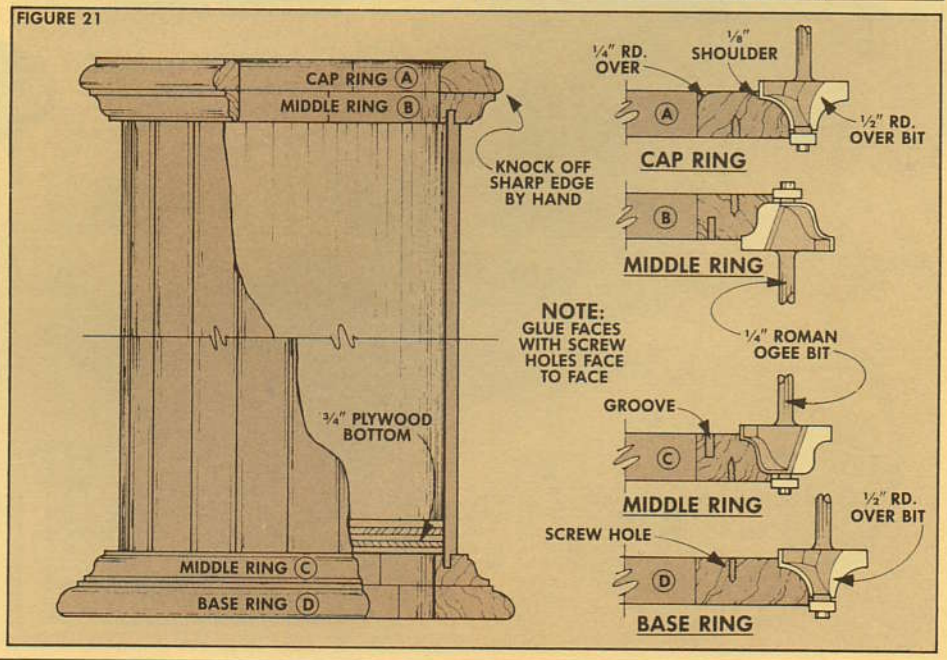

Planter Stand

CONTEMPORARY TAMBOUR IN THE ROUND

When I finished building the umbrella stand (page 6), I wondered if this same technique could be adapted to a more contemporary style. It only took a little experimenting to come up with this new version.

Design Note: Many of the basic techniques used to build this planter/wastebasket/glass top table are the same as used on the umbrella stand, so there are several references in this article to the one on the umbrella stand.

THE CYLINDER

The sequence for making the cylinder is almost exactly the same as for the umbrella stand except for the number of strips and the dimensions.

The first step is to cut 28 tambour strips (plus a few extra just in case.) Begin by cutting 4/4 stock into pieces 1¼" wide by 13½" long. Then resaw these pieces into 5/16"-thick strips, see page 6 for set-up.

After all the strips are cut to final dimension, round the edges with a ¼" roundover bit on the router table.

TAMBOUR CYLINDER. The cylinder is formed by making a tambour (just like on a roll top desk), except flexible veneer is used for the tambour backing.

Trim the veneer to a length of 13½" — the same as the length of the strips. Then cut the edges square so the final width is 2" longer than the combined width of the 28 tambour strips (about 37").

APPLY CONTACT CEMENT. After the veneer is cut to size, carefully brush contact cement on the backs of the strips and the back of the veneer.

ATTACH THE STRIPS. While the cement is drying, assemble the right-angle layout frame shown on page 7, Fig. 3. Then place the veneer in the frame and attach the strips. When all the strips are pressed down, trim the excess backing to form a glue flap that's equal to the width of one tambour strip. (See page 7, Fig. 5.)

RABBET EDGE. Next, cut a ⅛" x ⅛" rabbet on the top and bottom edges, see Fig. 1. This rabbeted edge is not mounted into a groove. Instead, the rabbet forms a border area between the flat strips and the circular cap and base rings. I cut it with a dado set and then sanded it smooth.

FORM THE CYLINDER. After rabbets are cut on both ends of the tambour, roll the tambour into a cylinder. (Again, this is the same as on the umbrella tambour, see page 7, Fig. 8 for assembly details.)

THE HEXAGONS

When the tambour cylinder is formed, place a basketball in it to determine the inside diameter. Then the rings for the top and base can be made. These rings start out as four hexagonal (six-sided) frames.

MAKE THE SEGMENTS. Start by cutting 24 pieces from 4/4 stock 3" wide by 8" long. Then, miter the ends of the blocks to 60°, making certain the final point-to-point length of the segments is 7½", see Fig. 3. The assembly sequence to form the four hexagons is the same as for the umbrella stand, see page 8, Fig. 11.

THE RINGS

After the four frames are glued up, they're routed into circles to form the end rings. The procedure here is different from on the umbrella stand because the cylinder doesn't fit in a groove. Instead, it's glued to a rabbet routed on the outside edge of two rings, see Fig. 7.

Routing this rabbet calls for some fairly precise work with a router and trammel attachment. I started by making some test cuts on a piece of ¾" plywood.

TEST CUTS. The first test cut is made with the trammel attachment adjusted to cut a circle slightly larger than the *outside* diameter of the tambour cylinder. Mount a ¼" straight bit in the router and cut a circular groove, see Fig. 2.

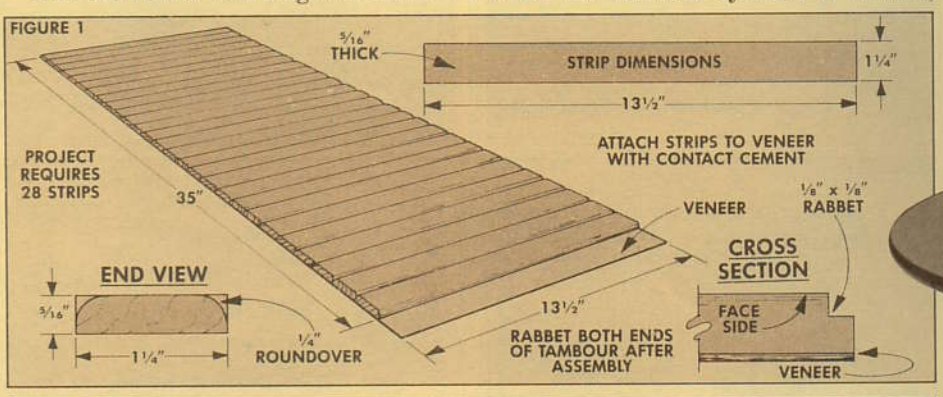

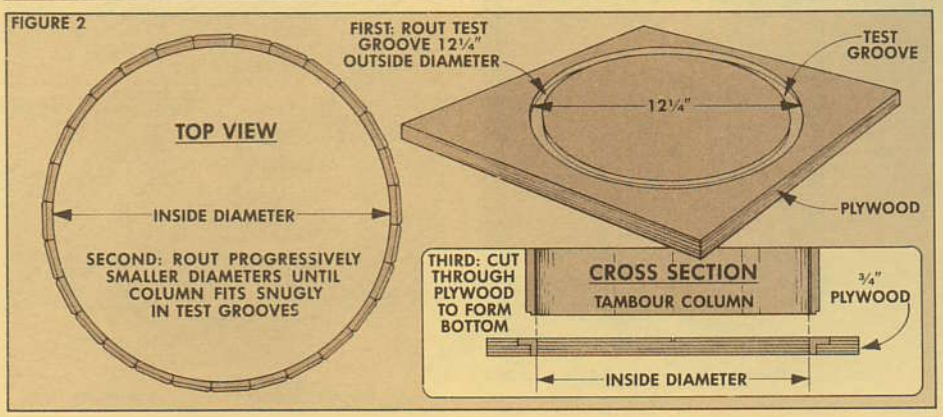

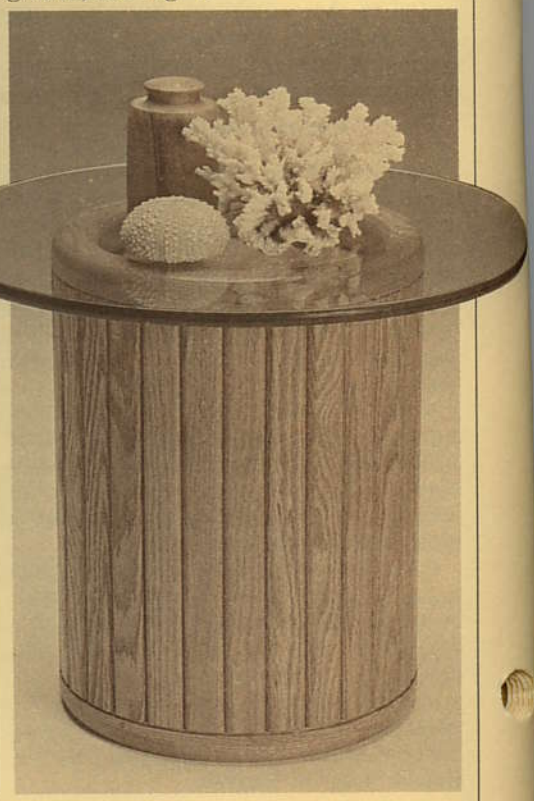

the cylinder fits snugly in the groove.

THE BOTTOM. When the cylinder fits the groove, make several more passes at successively deeper settings until a circle is cut from the plywood. Save this cut-out — it will serve as the bottom later on.

ROUTING THE RINGS

With this same diameter setting on the trammel attachment, rout a groove in two of the hexagonal frames. (When these two hexagons are cut into circles, this groove will actually be the rabbet that holds the cylinder in place, refer to Fig. 4.)

FORM THE SHOULDER. Start by routing a ⅜"-deep groove in two hexagons, see Fig. 4. These hexagons will be the middle rings that hold the cylinder, see Fig. 7.

Next, increase the trammel setting to progressively widen the grooves outward until the outside diameter of the widened groove is greater than the outside diameter of the tambour cylinder, see Fig. 4.

ROUT THE INSIDE. After this wide groove is routed in two of the hexagons, the center of all four hexagons can be routed to a circle. First, set the trammel to rout a 4⅜" radius, see Fig. 3. Progressively reset the depth and rout these grooves until the center is freed.

ROUT THE OUTSIDE. Next, the outside edges of all four hexagons are routed. To find the outside diameter, place the cylinder in the wide groove in one of the middle rings. Then trace the outside diameter of the cylinder onto the bottom of the groove, see Fig. 5.

After tracing the outside diameter, set the trammel attachment so the router cuts a groove just outside the traced circle. Make a trial cut, then make light adjustments until the inner edge of the routed groove touches the traced circle.

When the groove touches the circle, make the same cut on the other three hexagons. Then progressively increase the depth of cut until the outside is cut away from all four rings, see Fig. 5.

GLUE THE RINGS TOGETHER. After routing the rings to size, they're removed from the jigs and glued together in pairs. For strength, stagger the joints so they're offset by about ¾", see Fig. 7.

PROFILE THE EDGES

When the glue is dry, the edges of the rings can be rounded on the router table using a ½" round-over bit. To rout the outside edges, use the right-angle set-up on the router table as shown on page 9, Fig. 20. The inside profile can be routed free hand.

FINAL ASSEMBLY. After the rings are routed and sanded, they can be glued to the cylinder. Be sure to insert the plywood bottom into the tambour cylinder first, see Fig. 7.

FINISH. I wanted a natural finish, so I rubbed on two coats of tung oil.

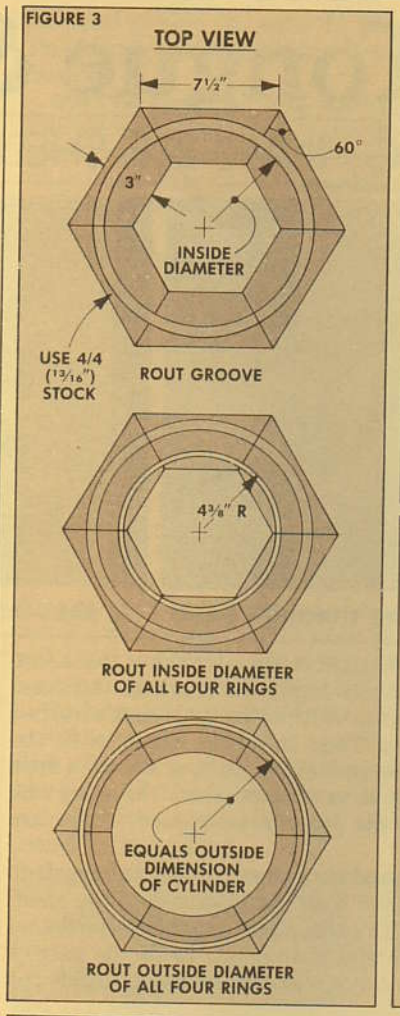

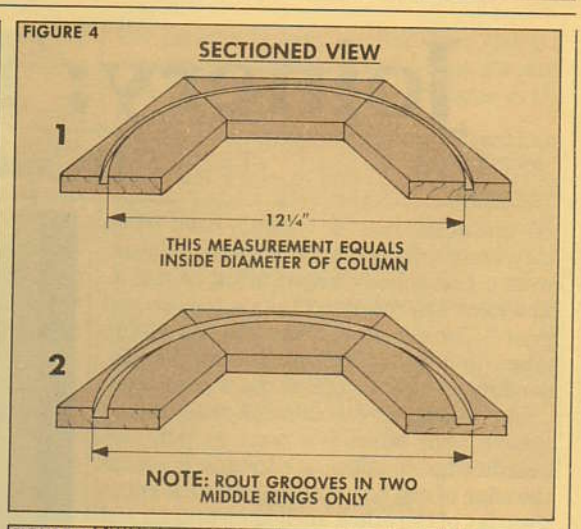

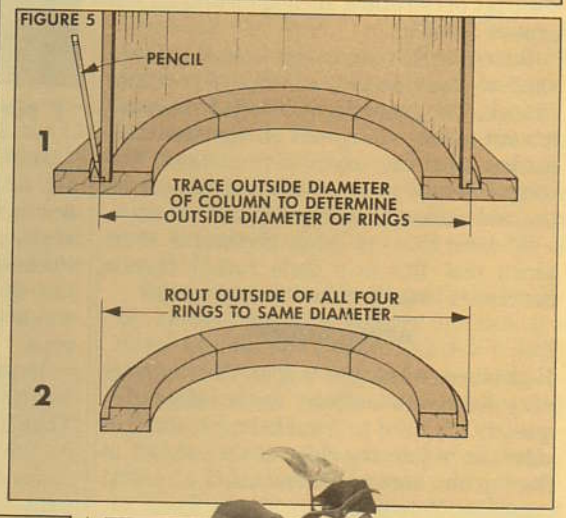

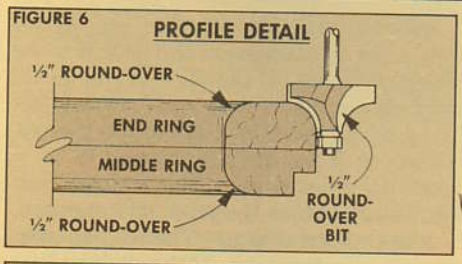

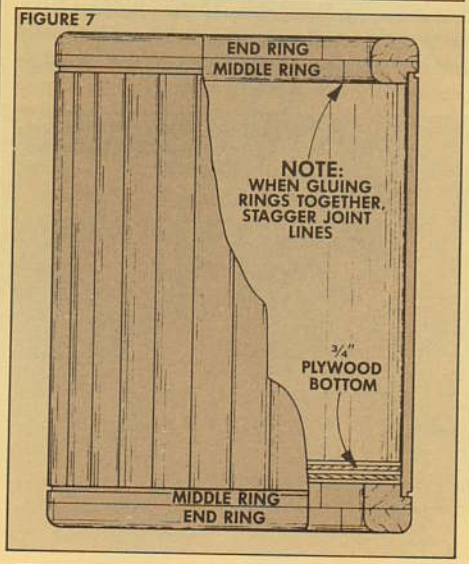

Joinery: Tongue & Dado

THE STRONG, INVISIBLE SHELF JOINT

It's one of the most frequently used joints in woodworking (especially in cabinet work), and nobody knows what to call it. The joint I'm referring to is a tongue and groove, or a tongue and dado, or a stub tenon and dado. The name changes depending on how it's cut on the workpieces.

For example, it's called a tongue and groove joint when it's used to join two boards edge to edge — a tongue is cut on the edge of one board and a groove is cut in the edge of the other, such as on tongue and groove flooring.

But when this same joint is used to join a shelf to the side of a cabinet, the names change. The groove is now a dado because it's cut across the grain on the face side (rather than the edge) of the board. The tongue is now a tenon because it's cut on the end rather than the edge.

To take this one step further, a short tenon that fits in a dado rather than a mortise is usually called a stub tenon.

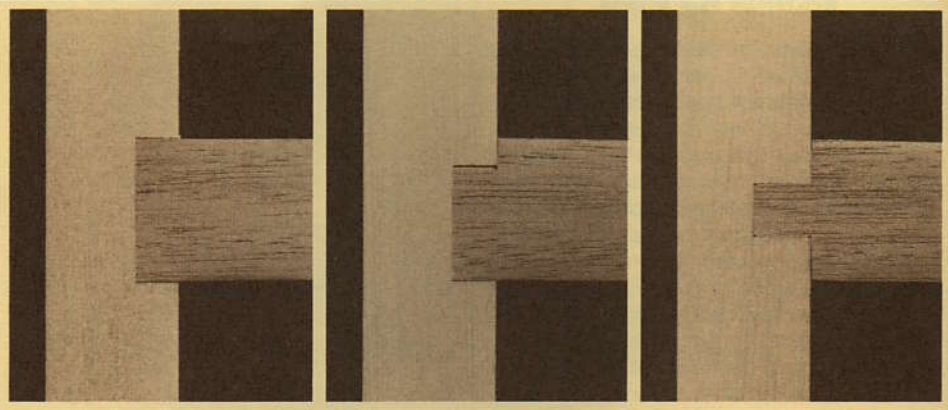

1 FULL THROUGH DADO **2** BARE-FACED TONGUE **3** TONGUE AND DADO

APPLICATIONS

No matter what you call it, this joint is very handy in cabinet work. Most frequently it's used to join shelves to cabinet sides, or to join the sides of the cabinet to the top and bottom. It can also be used to construct drawers.

In all of these applications, what you're doing is cutting a tongue (or a stub tenon) to fit in a dado. (Even though I know it's not proper, I still call this joint a tongue and dado, rather than stub tenon and dado. Old habits die hard.)

But why use this joint in the first place? If you're joining shelves to the sides of a cabinet, why not save time and cut the dado to width to match the thickness of the shelves, see Fig. 1. This way you wouldn't have the extra step of cutting a tongue to fit the dado.

APPEARANCE. The problem is that there are usually slight variations in thickness across the width of the shelf, or it's warped slightly. Then the dado is cut to fit the thickest part of the shelf, or it's cut a little too wide to accommodate the warp. So when the joint is assembled, there are gaps.

To produce a cleaner joint, cut the dado narrower than the thickness of the shelf. Then it's easier to cut a tongue (stub tenon) on the end of the shelf to fit the narrow dado. Any variations are hidden inside the joint.

STOPPED DADOES. Another way to improve the appearance of the joint is to cut *stopped* dadoes. If the dado is run all the way across the cabinet side, you will see the joint on the front edge of the cabinet. However, if the dado is stopped ½" or so from the front edge, it has a cleaner appearance because the joint isn't exposed.

BARE-FACED TONGUE. There's one more variation on this joint. If the shelf is going to be subjected to considerable weight, the tongue can be made thicker for greater strength.

In this case, the dado is cut only ⅛" narrower than the thickness of the shelf. Then a *bare-faced* tongue is cut on the end of the shelf. (A bare-faced tongue is one that has only one shoulder, see Fig. 2.)

Just to add to the confusion, this variation is usually called a rabbet/dado joint. (A rabbet is cut to produce the bare-faced tongue.)

This joint is commonly used to join the top and bottom of a cabinet to the sides, and also to join the back of a drawer to the sides. (See example on page 18, Fig. 29.) In both of these cases, the rabbet is cut a little deeper to produce a thinner tongue.

CUT THE DADO

Once the basic configuration of the joint is determined, the next decision to make is which part to cut first, the tongue or the dado.

I've found it's easier to sneak up on the size of the tongue (it's exposed and easier to get to) than it is to adjust the width of the dado. So, I start with the dado, and then cut the tongue to fit the dado.

STOPPED DADO. There are a lot of ways to go about cutting a dado, but the trick is how to cut *stopped* dadoes on *both* cabinet sides, and make sure they line up exactly. To do this, I use a router and the following procedure.

First, I clamp the two cabinet sides together — back edge to back edge, see Fig. 4. With the sides clamped together like this, mating dadoes can be cut in both pieces by routing one pass across the boards.

POSITIONING FENCE. The critical part of this procedure is positioning the fence to guide the router. I work off the center line of the dado. For example, on the wall cupboard (page 14) the top dado is centered 7¾" down from the top of the side piece.

FIGURE 4

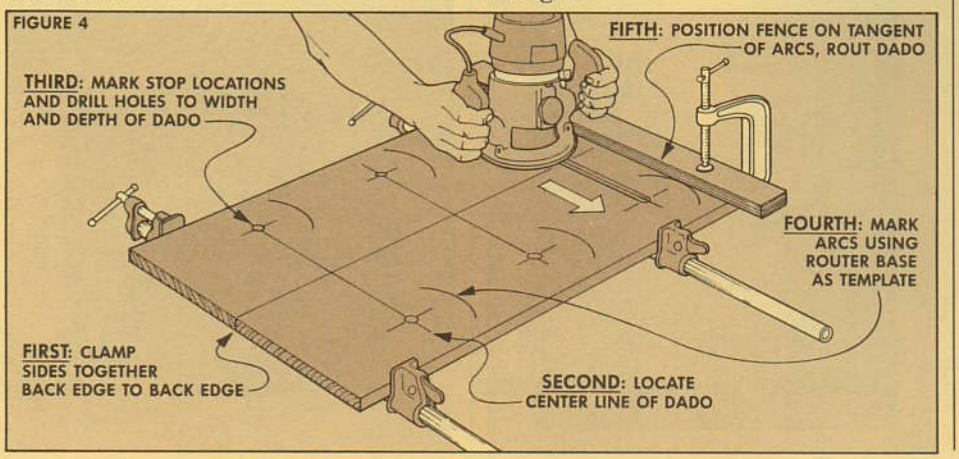

To position the fence, one method is to mark off a distance equal to one-half the diameter of the router's base. If a router with a 6"-dia. base is used, the fence is positioned 3" from the center line of the dado.

PROBLEMS. This method usually works fine, but I've noticed at times the dado has been as much as 1/16" off where I thought it should be.

The problem is that the collet that holds the bit is supposed to be centered in the router's housing, and the housing is supposed to be centered on the plastic base. But this is rarely the case. And it's surprising how far off these things can be.

Since the plastic base may not be centered on the housing, the distance from the edge of the base to the bit can vary. This means the position of the groove depends on which "edge" of the router base you hold against the guide fence.

ANOTHER METHOD. After getting frustrated with this approach, I came up with another procedure that ensures accuracy.

Clamp the boards edge to edge as before, and mark the center line of the dado. Then mark the stop points — where the dado must stop from the front edge of the cabinet's side piece, see Fig. 4.

At these points, drill a hole the same diameter as the width of the dado. (On the wall cupboard, I drilled a 1/4"-dia. hole, 3/8" deep.)

Now here's a trick. Mount a 1/4" straight bit in the router and position the bit in one of the 1/4"-dia. stop holes. Now hold the router in the same position it will be during routing and mark a partial arc to indicate the circumference of the base, see Fig. 4. Do the same at the other stop hole.

Then, using these two arcs, align the fence and clamp it in place. To rout the dado, place the router bit in one of the stop holes to start the cut and rout to the other stop hole.

Shop Note: Always move the router counter-clockwise. Since the guide fence is a straight line, think of "turning the corner" at the end of the fence so the router is moving around the fence in a counter-clockwise rotation.

THE TONGUES

After the dadoes are routed in the cabinet's sides, the tongues (stub tenons) can be cut on the ends of the shelves. There are actually two problems here.

The tongues have to be cut so they fit snugly in the dadoes. But since tongues are cut on *both* ends of the shelf, the other critical measurement is the distance between the shoulder of the tongue on one end and the shoulder on the other end.

To get the right shoulder-to-shoulder length, cut the shelf to length allowing for the length of the tongues on each end. Then, as the tongues are cut to length to fit the dado, also be sure to check the shoulder-to-shoulder distance between the tongues.

ROUTER TABLE. If I'm working with shelves made of plywood, I use the router table to cut the tongues. (The router always seems to cut a much smoother shoulder on plywood than a saw blade.)

To set up for the cut, I use a straight router bit that's larger in diameter than the length of the tongue. That is, if the tongue is 1/4" long, I use a 1/2" or 3/4" straight bit on the router table.

Then it's just a matter of adjusting the fence for the length of tongue you want, and raising the bit to cut a rabbet on each face of the shelf. (It's usually best to raise the bit in increments, sneaking up on the thickness of the tongue until it fits snugly in the dado.)

DADO BLADE METHOD. If the shelf is solid wood (rather than plywood), I usually cut the tongue on a table saw or radial arm saw using a dado blade. (Solid wood seems to put a lot of strain on a router bit, so I switch to the saw and dado blade.)

On both the table saw and radial arm saw, the tongue is formed by making one pass with the dado blade to cut a rabbet on one face and then flipping the shelf over to cut a rabbet on the other face. What remains is the tongue.

FIGURE 5

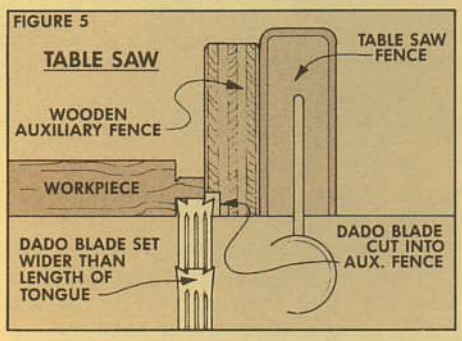

TABLE SAW. To use the dado set on the table saw, attach an auxiliary wooden fence to the table saw's metal fence. Then move the wooden fence over the dado blade, see Fig. 5. Turn on the motor and raise the blade into the fence to cut a relief.

Then turn off the motor and adjust the blade height to cut rabbets on both faces to produce the tongues.

RADIAL ARM SAW. On the radial arm saw, the process is very similar. Just clamp a stop block to the fence and adjust it's position so the dado blade cuts a tongue to the length needed, see Fig. 6.

FIGURE 6

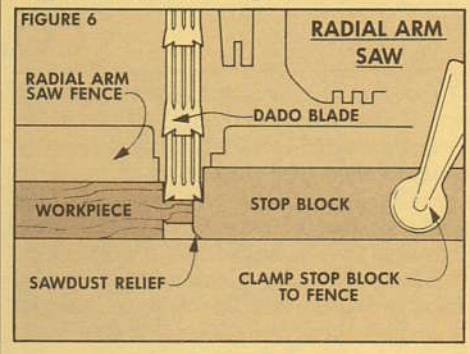

TRIM TONGUE

As mentioned above, I usually cut stopped dadoes in the cabinet side. This means the front corner of the tongue has to be trimmed back to fit the stopped dado.

It's tempting here to use a hand saw to cut down the shoulders and form a notch. But a saw (even a fine dovetail saw) makes a ragged cut. I prefer to use a chisel to get a nice smooth shoulder on the front edge of the shelf.

MARK SHOULDER. First I mark the shoulder on the tongue by holding the back of a chisel against one rabbet and roll it halfway over the top of the tongue, see Fig. 7. Then position it on the other rabbet and roll the other side.

When the top has been marked, hold the chisel in this mark and press down firmly to mark the shoulder line. Don't use a mallet yet. It's better to use hand pressure to carefully mark the shoulder line and carve out a small notch.

This small notch sets the shoulder line as it will be seen on the front of the shelf. Once this line is set, it's just a matter of using the chisel and a mallet to chip away a larger notch to fit the stopped dado, see Detail in Fig. 7.

SIZE OF NOTCH. One thing about the size of the notch. It doesn't have to be cut so the front on the notch fits snugly against the front of the stopped dado. In fact, it can be cut back an extra 1/8" or 1/4".

All of the alignment of the shelf should be done off the back edge because it's easier to get to during assembly.

FIGURE 7

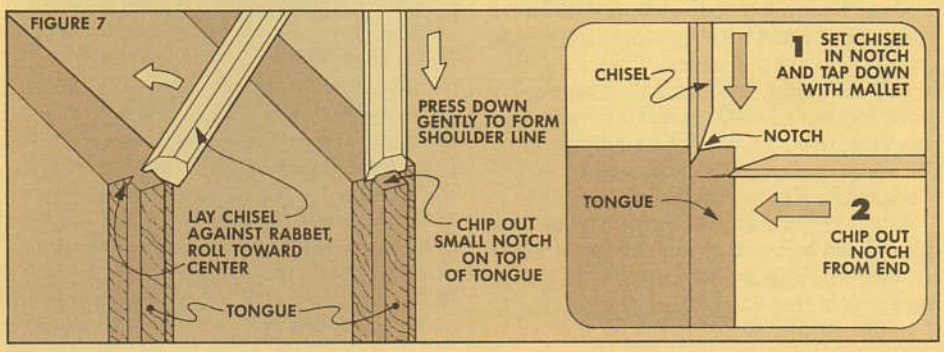

Wall Cupboard

COUNTRY STYLE CHINA SHELF

If your family is like mine, you've probably acquired a number of family heirlooms. My collection includes the formal plate that my grandmother traditionally used to serve the Thanksgiving turkey, a set of china that's too good for everyday use, and some figurines that belonged to my great aunt.

After postponing it longer than I should, I finally decided to build this wall cupboard to display these heirlooms and give them the home they deserve.

THE SIDES

To build the cupboard, I started with the sides (A). Glue up enough 4/4 stock to get two blanks with rough dimensions of 10½" wide by 31" long. After these blanks are dry and planed flat, trim them to a final size of 10" x 29½", see Fig. 1.

DADOES. The two side pieces are joined to the three shelves with tongue and dado joints. This means three ¼"-wide by ⅜"-deep dadoes are routed in both side pieces.

MARK CENTERLINES. First, mark the centerlines of the three dadoes. The top dado is centered 7¾" down from the top edge of the side piece and stops 4¾" from the back edge, see Fig. 1. The bottom two dadoes are centered 4⅞" and 10⅛" up from the bottom edge, and both of these dadoes are stopped 7¼" from the back edge.

ROUT DADOES. To rout the dadoes and keep them lined up across both sides, I clamped the two side pieces together, back edge to back edge (bookmatch style), and then routed the dadoes across both side pieces at the same time. (See page 13 for a detailed explanation of this technique.)

THE SIDE PROFILES. After the dadoes are routed, the profile on the sides can be laid out. Start by locating the six center-points to draw the six arcs on one of the side pieces, see Fig. 2.

The small radius arcs (at points A, B, D, and F) can be drawn with a standard pencil compass. But to draw the two large arcs (at points C and E) I used a beam compass.

Shop Note: A beam compass is just a thin strip of wood with a notch at one end to cradle the point of a pencil. Then a 1/16" hole is drilled along the "beam" wherever a pivot point is needed. Insert a brad in this hole and pivot the beam around it to draw the large radius arcs. (This is shown in *Woodsmith* No. 38, page 4.)

After the six arcs are drawn, you have to draw some connecting curves to complete the profile. (This is just a matter of sketching a gentle curve to join arc B to arc C, arc C to arc D, and arc D to arc E.)

CUT OUT PROFILE. Before cutting the profile, I used a hole saw to drill the holes at points D and F to form the ¾"-radius (1½" diameter) arcs. (Since these arcs are so small, a 1½"-dia. hole saw makes a smoother cut.) Then cut the rest of the profile using a sabre saw or bandsaw.

Shop Note: I found it was best to cut about 1/16" to the outside of the marked profile, just to be on the safe side. Then I used a drum sander mounted on the drill press to sand the curves down to the marked lines.

CUT SECOND SIDE. After the first side piece is sanded, use it as a template to mark and cut the other side piece.

THE SHELVES

Next, the three shelves are cut to size. Rip the top shelf (B) to a width of 4½", and the middle and bottom shelves (C) to a width of 7". Then cut all three to a final length of 35¾", see Fig. 3.

CUT TONGUES. After these three shelves are cut to size, a tongue is cut on each end to fit the dadoes in the side pieces. (See page 13 for more on the technique used to cut these tongues.)

MATERIALS LIST

Overall Dimensions: 37½" w x 9"d x 30⅞" h	
A Sides (2)	13/16 x 9 - 29½
B Top Shelf (1)	13/16 x 4½ - 35¾
C Middle/Bottom Shelves (2)	13/16 x 7 - 35¾
D Drawer Dividers (3)	13/16 x 7 - 5¼
E Stop Moldings (2)	13/16 x ¾ - 35
F Back Panel Pieces (10)	½ x 3½ - 32
G Splines	cut from waste
H Drawer Fronts (4)	13/16 x 4 7/16 - 8 1/16
I Drawer Sides (8)	½ x 4 7/16 - 6½
J Drawer Backs (4)	½ x 3½ - 7⅛
K Drawer Bottoms (4)	¼" plywood (cut to fit)
L Drawer Guides (8)	cut from waste

CUTTING DIAGRAM

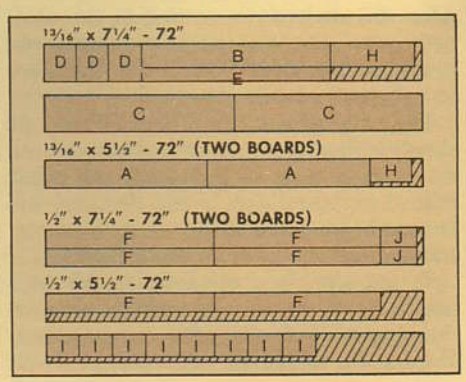

After the tongues are cut to fit snugly in the dadoes, notch each tongue ½" back from the front edge, see Detail in Fig. 3. (This notch serves two purposes. First, it provides a neat-looking joint line on the front corner of the shelf. It also allows the shelf to be pushed forward ½" to permit room for the back panel.)

STOP MOLDING GROOVE. After the tongues are cut, grooves are routed on the top and middle shelves for the stop moldings (E) that are mounted near the front edge of the shelves. (The grooves are routed now, but the stop moldings aren't added until later, refer to Fig. 14.)

To rout these grooves, set up the router table to rout a ¼" x ¼" groove centered ¾" from the *front edge* of both shelves, see Detail in Fig. 4.

PLATE GROOVE. Next, a plate groove is routed on the same sides of these two pieces. (This is a rounded groove that holds the edge of the plates upright for display.)

To make this groove, use a ½" core box bit on the router table set to cut to a depth of 3/16". Center this groove 2½" from the *back edge* of the shelves, see Detail in Fig. 5.

DADOES FOR DIVIDERS. To complete the shelves, stopped dadoes are routed for the three dividers (D) that are mounted between the middle and bottom shelves.

To locate these dadoes, start with the middle dado. First, measure the distance between the shoulders on the ends of the shelves and mark a line centered on this distance to locate the middle dado, see Fig. 6.

Then to determine the location of the other two dadoes, I had to do a little math. (In order to get equal spacing between the dividers, the dadoes *do not* lay out in equal increments.)

To get the right spacing, take the distance between the shoulders of the shelf (this should be 35") and divide this distance by four (to get 8¾").

Then add one-fourth the thickness of the drawer dividers (D) to this distance. (After planing and sanding, my 4/4 stock finished out close to ¾", so I divided ¾" by 4 to get 3/16". I added this to 8¾" for a total of 8 15/16".)

This is the distance from the *center* of the middle stopped dado to the *center* of the other two stopped dadoes, see Fig. 6. (Note that the remaining distance is only 8 9/16" from the middle of these dadoes to the shoulders at the ends of the shelves. This is the correct distance to get equal spacing when the dividers are in place.)

After marking the centerlines of the three dadoes, clamp the two shelves together (back edge to back edge) and use the same technique as on the sides to rout the stopped dadoes.

All three dadoes are ¼"-wide by ⅜"-deep and stop ½" from the front edge, see Fig. 6.

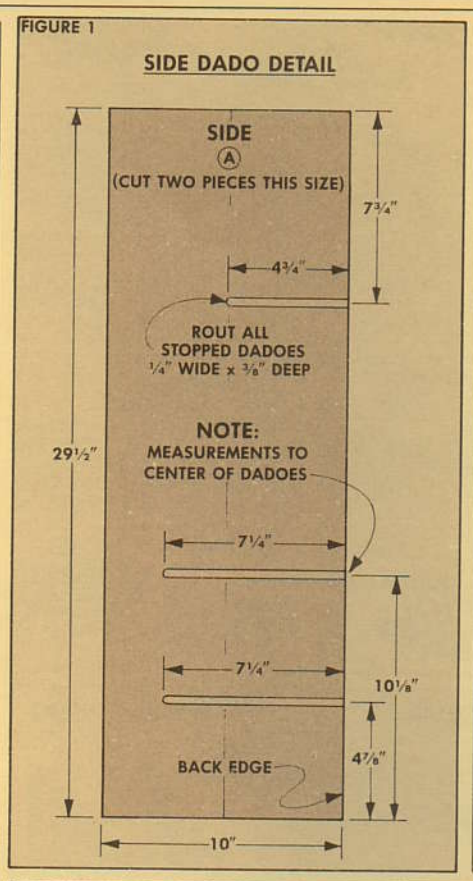

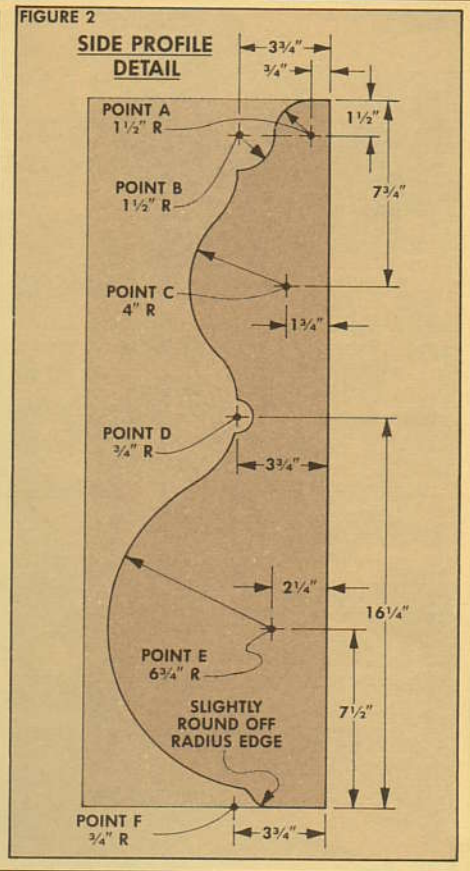

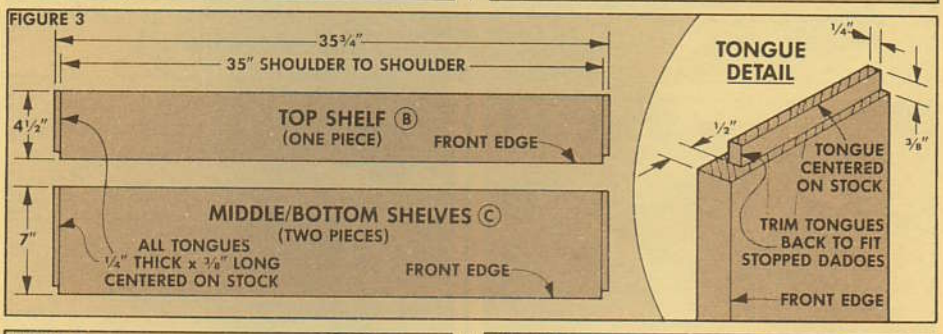

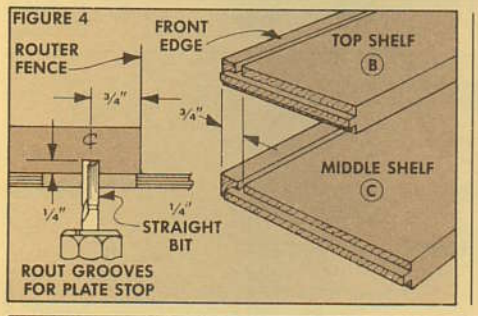

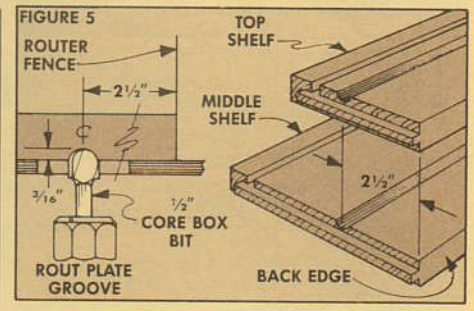

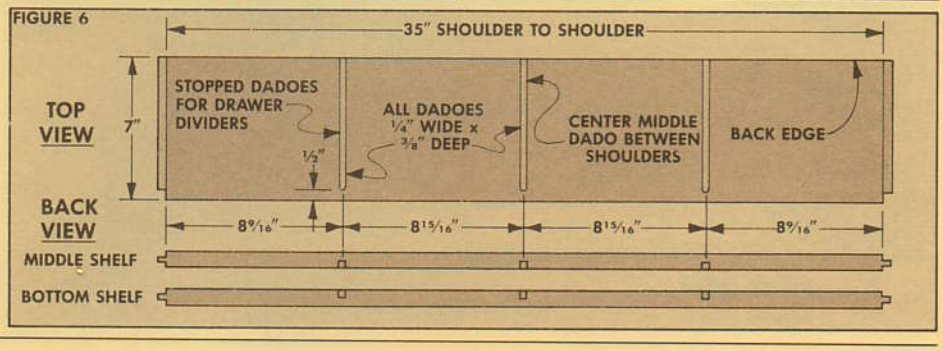

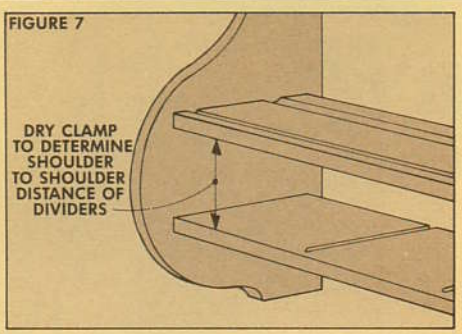

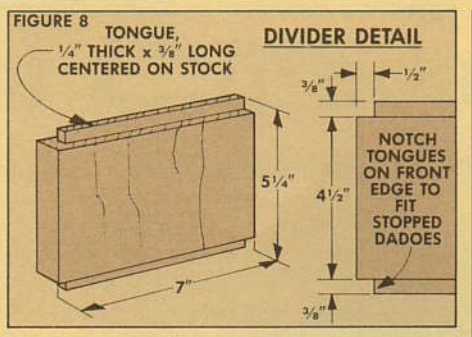

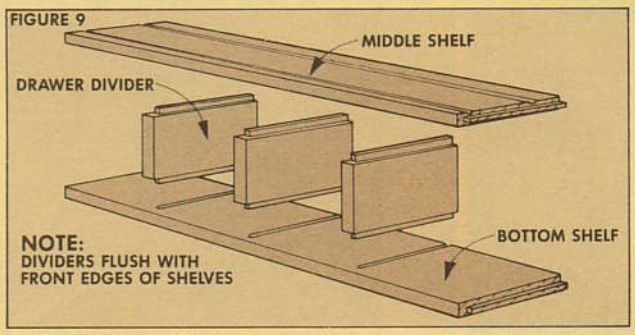

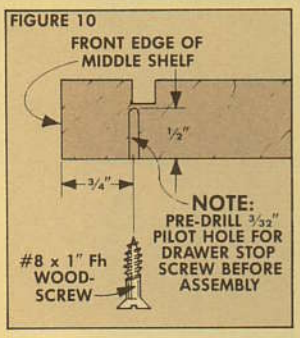

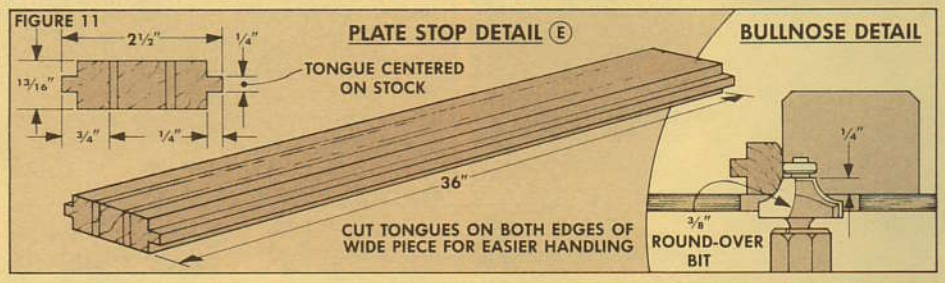

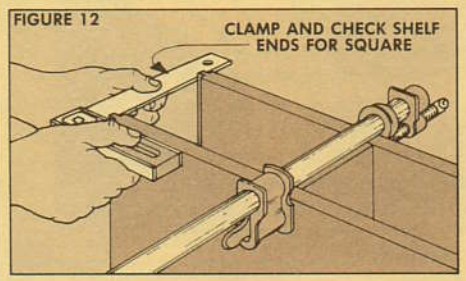

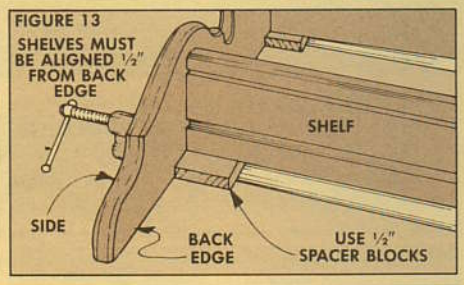

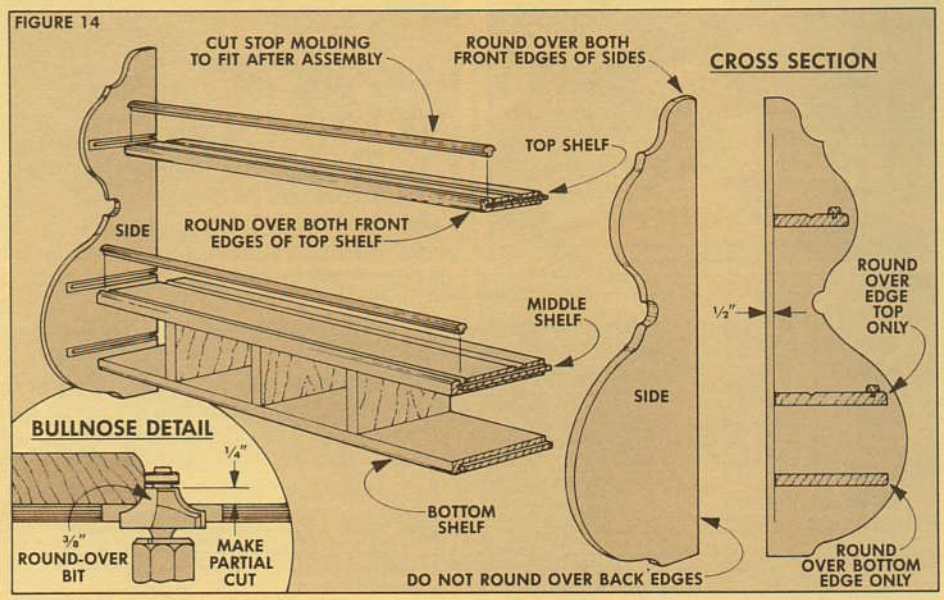

DRAWER DIVIDERS

After the stopped dadoes are routed on the middle and bottom shelves, the three drawer dividers (D) can be cut to fit. (Note: Since the dividers are mounted so the grain runs vertically, the length is shorter than the width, see Fig. 8.)

DETERMINING THE LENGTH. To determine the length of the dividers, first dry clamp the middle and bottom shelves to the side pieces. Then measure the distance between the two shelves to get the shoulder-to-shoulder distance of the dividers, see Fig. 7.

To this measurement, add the depth of the two dadoes to allow for the tongues on the ends of the dividers. In my case, this came to a total length of 5¼". Now cut the three dividers to this length and to a width of 7" to match the width of the shelves, see Fig. 8.

CUTTING THE TONGUES. After cutting the dividers to size, cut tongues centered on both ends to fit the dadoes in the shelves.

Next, notch the front edge of each tongue to fit the stopped dado so the front edge of the divider rests flush with the front edge of the shelves, see Fig. 9.

STOP MOLDING

To complete the shelves, I cut the two stop moldings (E) that fit in the grooves routed in the top and middle shelves.

To make these moldings, cut rabbets on all four edges of a piece of 4/4 stock, creating tongues to fit the grooves in the shelves, see Fig. 11. After the tongues are cut, rip ¾"-wide molding strips off each edge.

ROUNDING THE EDGES. Now the top edges of the molding strips can be rounded to a partial bullnose profile. This profile is done on the router table with a ⅜" round-over bit, see Detail in Fig. 11.

ASSEMBLY

Before assembling the pieces, I used the same set-up to round over both front edges of the side pieces and the top shelf, the top front edge of the middle shelf, and the bottom front edge of the bottom shelf, see Detail in Fig. 14.

DRAWER STOP HOLES. There's one other thing to do before assembly. Later, drawer stops are added to the underside of the middle shelf, refer to Fig. 30. The pilot holes for these stops have to be drilled *before* assembly, see Fig. 10.

ASSEMBLY. At last, everything is ready for assembly. Start by gluing the dividers between the middle and bottom shelves, making sure that the ends are square, see Fig. 12.

When the shelf/divider unit is dry, glue this unit and the top shelf between the sides. As these pieces are clamped into position, be sure to push the shelves for-

ward just enough to leave room for the ½"-thick back panel. To get uniform spacing, place a ½"-thick spacer block between each shelf and the pipe clamp, see Fig. 13.

Finally, cut the stop moldings to fit between the sides and glue them into the grooves in the shelves, see Fig. 14.

THE BACK PANEL

To complete the wall cupboard, I made a back panel out of 10 individual solid-wood boards. Start by cutting eight pieces of ½" stock 3½" wide by 32" long. Then cut two more pieces an extra ⅛" wide (3⅝" wide) for the two outside pieces. (These pieces are trimmed to fit later.)

CHAMFERING. Next, rout a 1/16" chamfer on both edges of the face (front) side of the first eight pieces, but only *one* edge of the two outside pieces, see Fig. 16.

CUTTING THE GROOVES. All of these back pieces are joined together with splines. To do this, first cut a ⅛"-wide groove (kerf) centered on both edges of each piece, see Fig. 17. (On the two outside pieces, cut the groove only in the edges with the chamfer.)

THE SPLINES. Now, rip ⅛"-thick splines (G) off the edge of a piece of 4/4 stock, see Fig. 18. Then glue each spline into *only one groove of each back piece*, see Fig. 19.

Design Note: Since the boards are unsupported at the top and bottom, the splines are used to keep the faces of the boards flush — preventing them from twisting forward or backward. However, they're glued into only one groove to allow for expansion and contraction.

CUTTING BACK TO FIT. Now, place the back pieces between the two sides on the assembled wall cupboard. The combined width should be too wide to fit, so trim the two outside pieces until they fit between the sides, (see Talking Shop, p. 23).

TEMPLATES. To complete the back panel, curves are cut on the top and bottom edges, see Fig. 22. To cut the curves, I made two templates. Tape a piece of poster board to the edge of the workbench and draw a 6"-radius and a 3¼"-radius arc to form the top profile, see Fig. 20. (Actually this is only half of the profile, just flip the template over to trace the other half.)

Follow the same procedure to draw a 26"-radius and a 10"-radius arc for the profile on the bottom edge, see Fig. 21.

CUTTING THE PROFILE. Now clamp the back panel pieces together and use the templates to mark the profiles. After they're marked, cut the edges to shape with a sabre saw, see Fig. 22. Then sand the edges smooth and rout a 1/16" chamfer on the top and bottom face (front) edges.

ATTACHING THE BACK. At this point the back panel pieces can be fastened down by drilling countersunk pilot holes centered on the width of each back piece, see Fig. 23. Then screw the back pieces in place with No. 8 x 1" flathead screws.

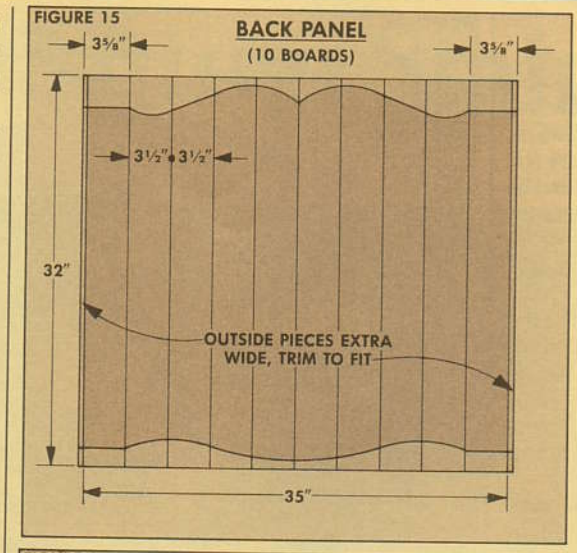

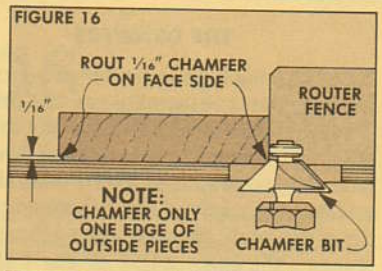

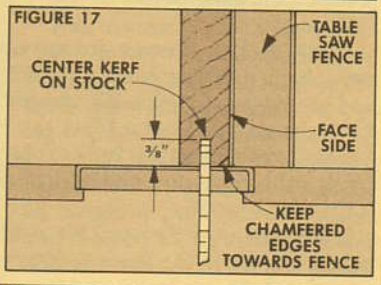

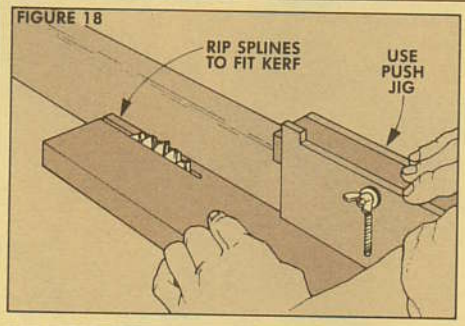

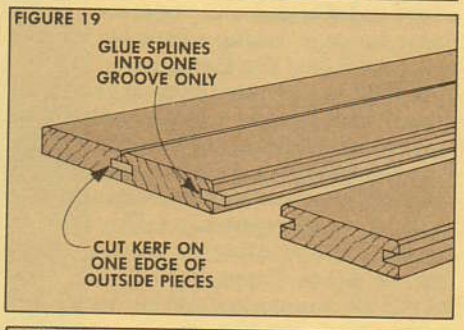

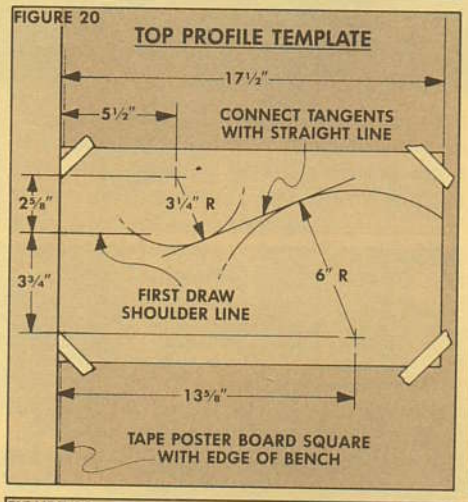

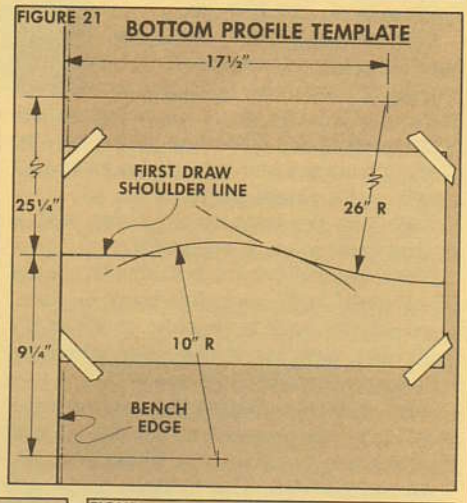

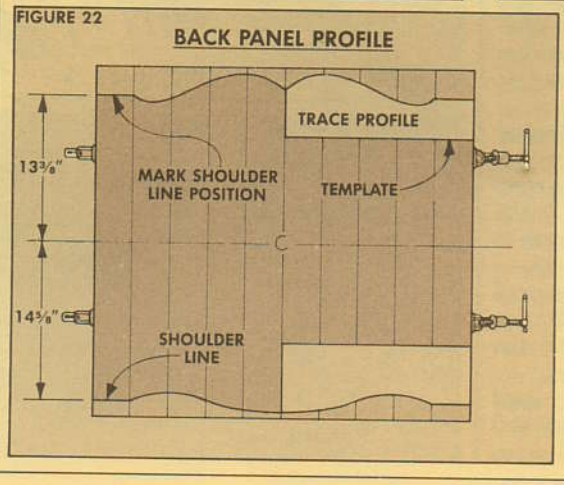

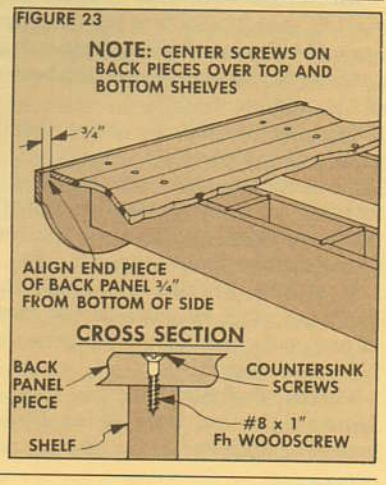

THE DRAWERS

After the back panel is screwed in place, the only parts remaining are the drawers.

FRONTS AND SIDES. To build the drawers, start by cutting the four drawer fronts (H) from 4/4 stock so they're 1/16" less than the width and length of the drawer openings. Then cut eight drawer sides (I) out of 1/2" stock to the same width as the fronts and 6 1/2" long.

JOINERY. The drawer fronts and sides are joined together with dovetail tongue and groove joints. (See *Woodsmith* No. 31 for more on this joint.) First cut 1/4"-deep dovetail grooves on the back of the drawer front, using a 1/4" dovetail bit in the router table, see Fig. 25.

Next, keep the dovetail bit at the same height and move the fence to rout a tongue on one end of each drawer side, see Fig. 26. Sneak up on it, taking a little bit off each side until it just fits the groove.

To hold the plywood bottom (K) in the drawer, rout straight grooves on the inside of the sides and front, see Detail in Fig. 24. Rout through grooves in the sides. But in the front, start and stop the bottom groove at the dovetail grooves, see Fig. 24.

RAISED FRONT. After the joints are cut, I used a Sears Panel Raising Bit (No. 9HT-25465) to cut a beveled border on each drawer front, see Fig. 28.

THE DRAWER BACK. Now the drawer back (J) can be cut to size. To determine its length, dry assemble the sides to the front and measure the distance between the sides, see Fig. 27. Then add 1/2" for the two 1/4"-long tongues and cut the backs to this length and a rough width of 4".

Now join the back to the sides with a tongue/dado joint, see Fig. 29.

Next, cut the drawer bottoms (K) out of 1/4" plywood to fit, and slide them in place. Then cut the back to finished width so it's flush with the top of the sides when it's resting on the drawer bottom.

Also, before gluing up the drawer, cut a 1/2"-wide notch centered on the top edge of the back for the drawer stop, see Fig. 27.

DRAWER STOPS. The drawer stops are simply small wooden turnbuckles that keep the drawer from pulling out too far, see Fig. 30. Mount them to the bottom side of the middle shelf.

DRAWER GUIDES. To make the drawer guides (L), rip eight 3/4"-wide pieces just thick enough so that each drawer fits comfortably when the guides are glued to the dividers. These guides are cut to length to act as drawer front stops, see Fig. 33.

HANGERS. Finally, to mount the wall cupboard, drill 1/2" holes on the back edge of each side and mount hangers over the holes, see Fig. 31.

FINISH. To finish the plate rack, I used Minwax Puritan Pine Wood Finish and topped it with two coats of tung oil.

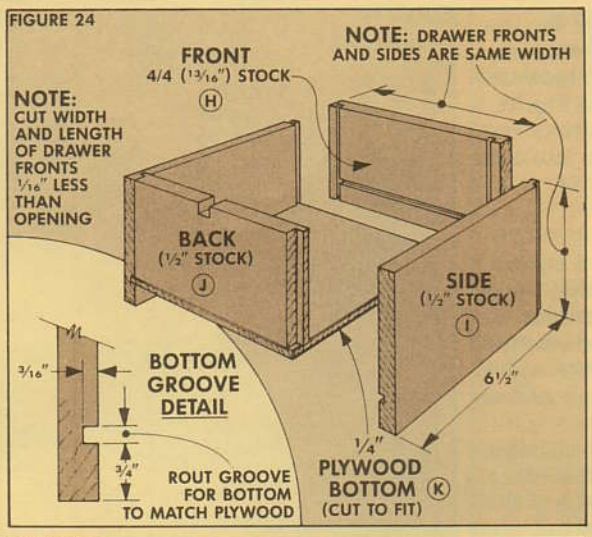

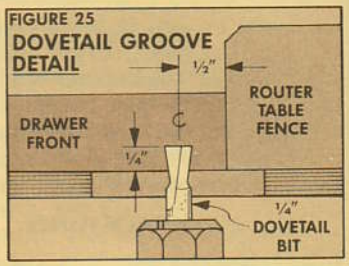

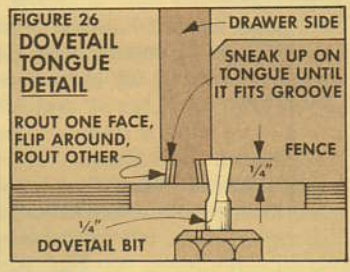

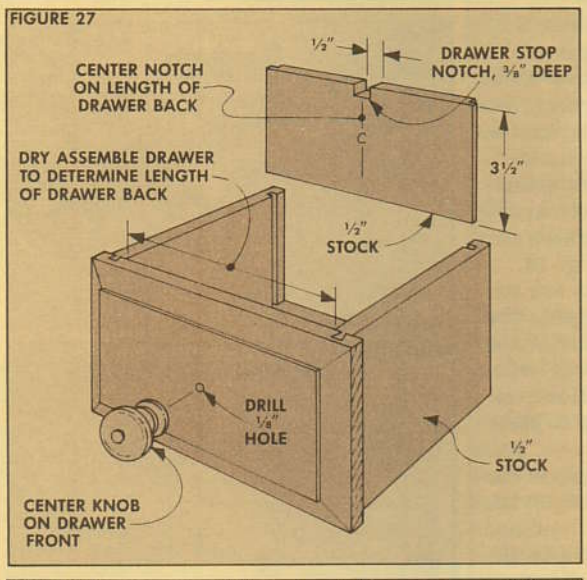

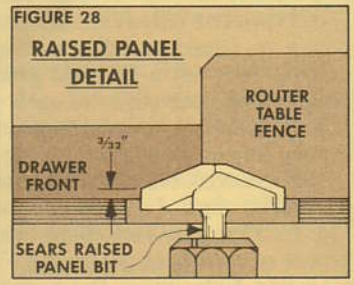

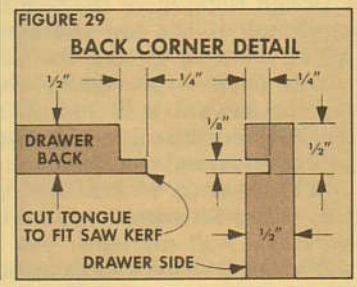

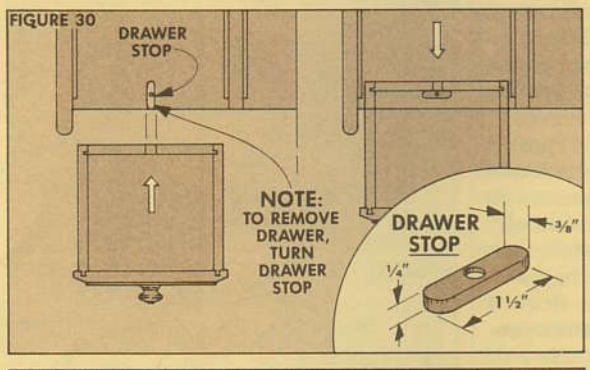

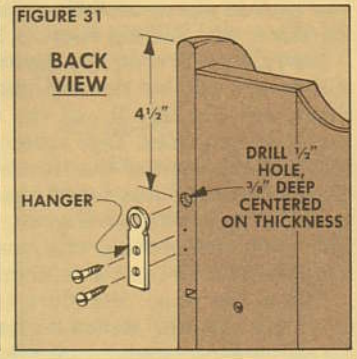

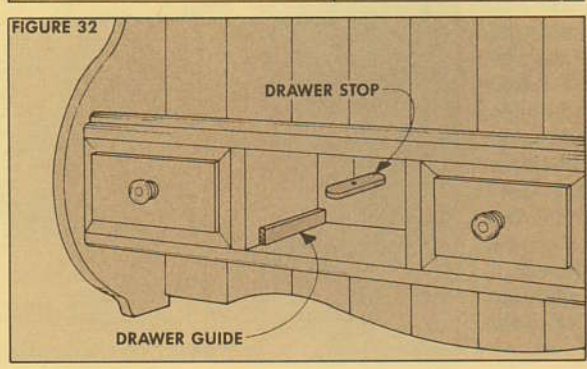

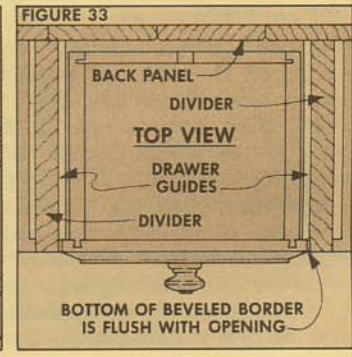

Finishing: Stains

A DYING ART

Why on earth would anyone want to stain a beautiful piece of hardwood? That's a thought that goes through my mind whenever I see a can of stain, or especially when I see the mass-produced furniture in a showroom (where the grain and character of the wood are almost totally obscured with heavy stains and toners).

There are some woods that I just plain refuse to stain. It would be almost criminal to stain any exotic wood. And there are some domestic woods that are best left alone to develop their own natural color and patina as they age. Cherry is one example of a wood I usually leave alone.

When cherry is freshly cut and planed, it's a light salmon color — not very interesting. But after it's exposed to the ultra-violet rays of the sun for a couple months it slowly turns to a deep, rich red.

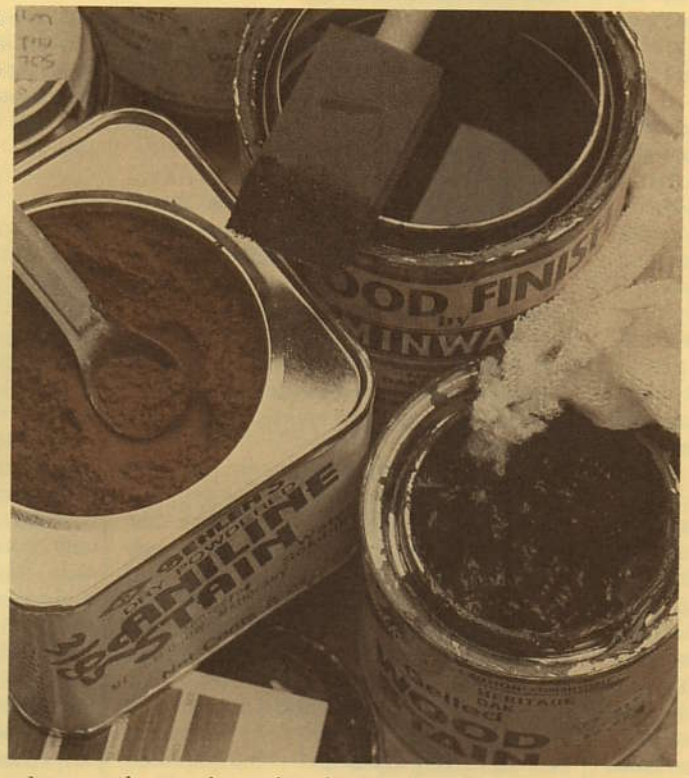

It may seem quicker to use a stain to create that aged color — years of fake patina can be added by a quick wipe with a stain-covered rag. But once the wood is stained, the color will remain fairly constant over time, and it loses much of its character.

However, I'll admit there are times when I reach for that can of stain. When the natural colors of the wood need a little assistance, or when the style of furniture (older period pieces, for example) dictates a darker color.

INCONSISTENT COLORS. I think one of the best uses of stain is to even out inconsistent colors. No two boards (even of the same species) are the same tone. In fact, color can vary dramatically within the same piece of wood — between the heartwood and sapwood.

If you have to glue up a wide panel using several different boards, the color variations can be very distracting. In this case, stain can help even out the colors.

COLORS

Coloring wood is what staining is all about. Every period has had its popular colors. It was golden oak in the early part of this century and blood red mahogany during the Victorian era.

In the 1950's, the fad was to bleach wood (even walnut) to obtain a *light* blond color. (It's at this point that Dave, one of our technical illustrators, always mentions his theory about that famous blond, Marilyn Monroe, creating the popularity of this furniture. I always listen to his theory in its entirety and then tell him to get his mind back on his drawings.)

Staining has become so popular that wood in its natural color seems almost odd to many people. As a matter of fact, many people who don't work with hardwoods assume that oak is naturally golden the minute it's cut from the log. They're almost disappointed to find that maple isn't naturally honey brown, and cherry isn't naturally deep red. To hasten nature and to "correct" the color of the wood, stain is used to make the wood look like the color we think it should be.

THE NAME GAME. One of the problems with coloring wood (and one of the biggest points of confusion) is the names given to stain colors. Every manufacturer has an idea of what color "golden oak" or "brown mahogany" is. It's even worse with names like "Early American" or "Provincial."

The names are simply marketing tools — it's nicer to say "Early American" rather than "Number 230." But other than that there's really no particular reason for the names and no consistency from manufacturer to manufacturer.

COLOR TONES. Another closely related problem is that most people want to find a *perfect match* for some color or shade they're familiar with or already have on a piece of furniture.

Bob Aumann, Technical Sales Advisor for the Minwax Company, gets phone calls all the time from woodworkers who are trying to match a color to an existing piece of stained wood. He explains that it's next to impossible to obtain a *perfect* color match and better to talk about color "tones."

Each piece of wood is different and changes as it ages. So when staining wood, I look for a tone I like, or one that's compatible with an existing piece of furniture.

As I'm looking at color samples, I try to pick out the closest tone to what I want. Let's say I want something that *I* would consider fruitwood. If I used the color samples as a guide, this might be anything from a light tan to a reddish brown depending on the brand of stain.

So the best approach is to ignore the names and look for the tone that comes closest to what you want. Then if it's not quite right, look for another tone to balance it out. As long as they're from the same manufacturer and have the same solvent base, one stain can be mixed with the other until you get the tone you want.

Shop Note: I mix up samples using tablespoons of stain mixed in baby food jars. I'll start with a light color and slowly add a dark color. Each jar is labelled with the exact amount of each color added. Then when I get the correct tone, I use these proportions to mix up enough in a quart mayonnaise jar to complete the project.

One of the biggest problems comes when you want to make one wood look like another. For example, oak is often stained to have the color of walnut, mahogany, or cherry. But one of the rules of staining is not to stray too far from the natural color, and don't try to force a color on a wood that's not right for it.

TEST SAMPLES. While building a project, rescue a few scraps of wood to use as test samples before they reach the trash can — or in my case get kicked under the table saw. When it comes time to prepare the surface for finishing, sand these scraps the same as the rest of the project.

Then, follow the *complete* finishing procedure that will be used on the finished

project on all of these test samples. Stain the scraps different colors, and then take the time to follow up with a top coat.

Most stains (especially dye stains) dry much duller than they will appear under a top coat. The resins in varnishes and oils darken and intensify colors. The only way to get a true idea of what the color will look like is to apply the top coat.

PIGMENTS AND DYES

Part of the confusion in staining is simply wading through the variety of materials available to color wood. There are "penetrating oil stains," "pigmented wiping stains," "aniline dyes," "non-grain raising dyes," "gelled stains," and many others.

So, what's the difference between all these types of stains?

Basically, all wood coloring materials can be broken down into two main groups, those with pigments, and those with dyes.

PIGMENTS. Pigments are opaque minerals ground to a very fine powder and held in suspension in a liquid solvent — like bananas in jello.

A binder, usually varnish, is also added to the mixture to help the pigments "stick" to the wood as the solvent evaporates. The amount of binder added can vary. Those stains that are called "sealer-stains" usually contain a higher proportion of binder allowing them to stain and seal in one pass. But they also dry slower because the binder takes longer to dry.

Pigmented stains are a surface treatment — they don't penetrate deeply into the wood cells. When the stain is applied and the solvent and pigment mixture soaks into the wood, the pigments get filtered out by the first row of wood cells. The pigments will sit in the pores and on top of the wood to form the layer of color.

Lots of manufacturers claim to make pigmented stains that penetrate. But since the pigments are filtered out, it's the solvent that penetrates the wood, not the pigment.

When you think about it, pigments are really just colored dirt — a contaminant that's added to the surface. If the layer of pigments is light, some of the grain pattern will still show through. But many heavily pigmented (sometimes called semi-transparent) stains hide the grain almost entirely, like a light paint.

DYES. Dyes, on the other hand, don't hide the grain or character of the wood, they color it. Dyes soak in and penetrate the individual wood fibers. Since they actually "stain" the fibers, they're much more transparent than pigments.

Dyes are sometimes referred to as "aniline dyes." Aniline is a benzene or coal tar derivative that's used in the manufacture of rubber, varnishes, resins, and in this case, dyes.

PIGMENTS VS. DYES. Okay, so how can you tell if a stain is a pigment or a dye? The easiest way is simply to open the can. Pigments settle out and build up as sediment on the bottom of the can. They need to be stirred before and occasionally during use. Dyes are dissolved in the solvent and there should be little or no sediment on the bottom.

George Frank in his book *Adventures in Wood Finishing* describes the difference between using dyes and using pigments "like the difference between getting a deep suntan and using makeup to imitate one."

Which is actually better — stains with pigments or those with dyes? As a general rule I use pigmented stains wherever I want a uniform color or when the wood grain isn't too spectacular. I'd also recommend a pigmented stain on woods that are likely to get blotchy — such as on pine, maple, or birch.

But I choose a dye or a dye/pigment combination such as Minwax (see box below) when I want a deeper, richer color that accents the grain — such as on butternut, oak, or ash.

Whether it's a pigment or a dye, the staining agent has to be dissolved in a liquid medium: oil, water, or alcohol. Each has it's own advantages and disadvantages.

PIGMENTED OIL STAINS

The most common stains on the market are pigmented oil stains. Duffy's, Carver Tripp's, Ace Pigmented Wood Stains, and Sears Open Hearth Stains are all examples of pigmented oil stains. They're made of pigments and a binder that are held in suspension in a petrochemical (oil) solvent, such as mineral spirits.

APPLICATION. To apply a pigmented oil stain I use an inexpensive sponge brush. The brush shouldn't be dripping wet, but wet enough for the stain to flow out without excessive brushing on the wood surface. Sometimes I use a Q-Tip to get into tight corners and moldings.

Brush with the grain and whenever possible, tilt the work so the surface being stained is horizontal. If there are a number of vertical surfaces, start at the bottom and work up. This allows any runs to be wiped and blended into the already stained surfaces. It also helps to start at the middle of a surface and work towards the outside, so excess stain doesn't collect and drop over the edges.

WIPING OFF THE EXCESS. If the stain is to be wiped (sometimes it's called a wiping stain), allow it to sit on the surface for 5 to

FINISHING TIPS . . . *a closer look at Minwax*

I've always liked using Minwax Wood Finishes, but I've never been quite sure why they're called a "wood finish" rather than a stain. I've also wondered why only some of the Minwax colors seem to settle to the bottom of the can, while other colors don't.

I finally decided to give Bob Aumann of Minwax a call to quench my curiosity. Bob said that Minwax is called a wood finish because it contains a higher percentage of resins than many stains. (Regardless of the name, it doesn't contain wax).

Because of these resins, Minwax claims their Wood Finish soaks in and seals in one step. However, they admit that for projects that come in contact with wear, dirt, or moisture (which I consider just about any project), a top coat should be added over the Minwax stains.

When I asked him why some Minwax colors settle out of solution when others don't, he explained that some colors (Nos. 210B, 211, 2716, 218, 2718, and 2750) are transparent and only contain dyes (oil soluble dyes). The other colors are what he called "masking colors" and contain both dyes and pigments. (It's these that have the gunk in the bottom of the can.) However, since all Minwax colors are dissolved in the same solvent, they can be intermixed to get different shades.

APPLYING MINWAX. Minwax is easy to apply. I follow the directions on the can and use a rag or foam brush and soak the surface. Let it penetrate for 5 to 15 minutes and then wipe off all the residue.

Minwax is a slow drying stain (because of the resin content) so lap marks are not a problem. But if the humidity is low, the stain (actually the resins) can get gummy before it can be wiped off. If this happens, re-wet the surface with more Minwax — it contains mineral spirits that dissolve the resins.

Note: Don't use plain mineral spirits to wipe off drips or runs or areas that have thickened because the stain has spilled over from another surface. Although mineral spirits will clean up the problem areas and the surface will look bright and uniform, it dilutes the color. After the wiped area has dried a couple hours, it will be much lighter than the surrounding area.

A SECOND COAT. After the stain dries completely (12-24 hours), the color may look pale and there may be spots where the stain hasn't penetrated evenly. Then, as the directions suggest, apply a light second coat and wipe it off. The second coat brings the color up and tends to soak into those spots that did not take the first coat. Finally, I always finish it off with a top coat of tung oil or varnish.

20 minutes before wiping. (Check the instructions on the can since the amount of varnish added and therefore the drying time varies from brand to brand). Then, use a clean, lint-free rag to wipe in the direction of the grain. Sometimes I'll use Q-Tips or a dry bristle brush to soak up any extra stain in corners or tight spots.

The amount of pigment left on the surface or in the pores of the wood (and therefore the intensity of the color) is controlled by two factors: 1) the amount of time left before wiping — the longer the time, the darker the color, and 2) how hard the surface is wiped — the harder it's wiped, the lighter the color.

Don't try to stain and wipe a large surface (such as a desktop or tabletop) a section at a time. The stain may be applied heavier or sit longer on one area than another which results in different shades. If this happens, a second coat may solve the problem, since it dissolves the first coat.

GELLED STAINS

I've had some good experiences with gelled stains. They contain pigments suspended in a heavy-bodied oil mixture. One of the advantages of this approach is that the pigments don't settle to the bottom of the can. So, as the stain is used, the color remains consistent — it doesn't get darker as you get to the bottom of the can.

However, on the negative side, gelled stains are much more difficult to mix to get a certain tone.

The thickness of the gelled stains varies from brand to brand. Wood-Kote Gelled Stains, for example, are like Vaseline petroleum jelly but Formsby's Wiping Stains and Behlen's Gel-Stain are like watery, half-melted jello. (Note: The thicker ones can build up in corners and moldings and be difficult to wipe out of some projects.)

The advantage of these slow drying gels is they're easy to wipe on with a rag, especially on vertical surfaces. You also don't have to worry about spilling it all over as you work. Lap marks aren't a problem since you can work in just the area you want and the gel won't drip or run.

LATEX STAINS

Latex stains became popular a few years ago when finishers, like everyone else, became concerned about the chemicals in the products they were working with. Latex stains are environmentally safe, won't emit fumes, and are easy to clean up.

Deft is the most common brand and it's one of the only pigmented stains that won't lift under Deft Clear Finish (a lacquer).

Although latex stains create a uniform surface, the pigments sit so heavily on the surface that the color is very cloudy and the grain is almost entirely hidden. I feel the disadvantages of this cloudy, heavy color outweigh the advantages.

OIL SOLUBLE DYES

In addition to pigmented oil stains, there are powdered aniline dyes that can be dissolved in oil solvents such as lacquer thinner, naphtha, and turpentine, or in finishing materials such as tung oil, varnish, or Danish oil.

MAKE YOUR OWN. You usually can't run down to your local paint or hardware store and buy oil soluble powdered aniline dyes. (Though some of the Minwax Wood Finishes and some of the other brands labelled penetrating oil finishes actually are a solution of dyes in mineral spirits and resins.) I usually send away for the powdered dyes from one of the mail order suppliers listed in Sources on p. 24.

I've been experimenting with mixing my own colors in a solvent such as mineral spirits. It makes a penetrating stain with a wide color choice that's slow drying and won't leave lap marks.

"Pigments are suspended in a liquid solvent... like bananas in jello. Dyes are completely dissolved, they penetrate and actually 'stain' the fibers."

To get a tone that's similar to Minwax's Golden Oak for example, I mix 1 oz. of J. E. Moser's Golden Yellow Oak Oil Soluble Aniline Dye and 1 qt. of mineral spirits.

WATER SOLUBLE DYES

More common than the oil soluble dyes are the powdered aniline dyes that are made to be dissolved in water. They provide the deepest, widest variety, clearest, and most permanent colors available. They're inexpensive, dry relatively quickly, and won't bleed into top coats.

Sounds like the perfect stain, right? I'll have to admit, they do sound appealing. But like anything, they have a major disadvantage — they raise the grain. When a water dye contacts a freshly planed and sanded surface, the wood fibers swell and stand right up like three days' growth of whiskers.

RAISING THE GRAIN. The way to prevent this problem is to purposely raise the grain with clear water and knock off the "whiskers" *before* applying the dye. Wipe the entire surface with a damp sponge and allow two hours drying time. Lightly sand off the raised whiskers and finally apply the dye.

PREPARING WATER SOLUBLE DYES. Aniline powder dyes are sold in 1, 4, or 8 oz. envelopes, jars, and cans. I mix them up in a quart mayonnaise jar. (Never use a metal container since the metal will contaminate the colors when they come in contact with tannic acid in the wood.)

The basic "rule of thumb" for measurement is 1 oz. powder to 1 qt. hot water. (Note: The various dye colors differ in weight, so you can't use volume as an indication of quantity from one color to another.)

If a darker shade is desired, add more powder. If a lighter shade is desired, more water. If a different hue is desired (such as red mahogany being too red), another dye (for example, brown mahogany) can be added.

After the aniline dye mixture has cooled, pour it through a filter or piece of cheesecloth to strain out any undissolved dye. Then keep the mixture stored in an airtight glass or plastic container.

APPLYING A WATER SOLUBLE DYE. Dyes soak into the wood and don't need the wiping that pigmented stains do. But some strange things can happen. In fact, it's easy to panic after applying a water soluble aniline dye and allowing it to dry.

The color that initially goes on is very close to the color the dye will be once it's covered with a topcoat. However, as it dries, the dye will lose it's brilliance and even change colors. A brown may turn green and you'll think you've ruined your whole project. Just put a top coat on and the color will come back.

I usually apply water soluble dyes with a wide sponge brush or rag. To darken the color, a second coat can be applied after the first coat is completely dry. By applying more coats, it will continue to darken.

Besides having to raise the grain, I've had one major problem with water soluble dyes — they don't settle down very well into the open grain of oak and ash. There are little spots where the dye refuses to penetrate. These spots stand out white against the stained background.

After talking to a number of finishers and manufacturers, I've discovered that everyone seems to have this problem, but no one seems to know why it occurs, or what to do about it — except to not use water soluble dyes on oak or ash.

ALCOHOL SOLUBLE DYES

If it weren't for the problems of raising the grain and not soaking into oak and ash pores, water soluble dyes would be great. Alcohol soluble aniline dyes solve these problems (alcohol won't raise the grain), but create new problems.

Alcohol soluble dyes (sometimes called spirit stains) also come as a powder. They're dissolved in wood alcohol (methanol) in the same "rule of thumb" quantity (start out by trying 1 oz. powder to 1 qt. alcohol).

But the problem with alcohol dyes is that they dry almost instantly. This means they don't soak in very deep, and lap marks are

a constant problem. Lap marks occur anywhere the dye starts to dry and then a second pass is made over the dry spots.

Watco used to have a line of alcohol-based Five Minute Stains but discontinued that line a couple years ago. Many woodworkers without spray equipment found that they dried so quickly that they were difficult to brush on.

But alcohol dyes are good for touch-up work. For example, if I'm rubbing out a top coat and rub right through the finish and the stain down to the bare wood, I use an alcohol stain to repair it. The alcohol provides enough "bite" to help the dye penetrate through a sealed surface.

NGR STAINS

It would be great if a stain could be developed that had all of the beautiful color characteristics of a water soluble aniline dye, but wouldn't raise the grain like the alcohol soluble. It has. It's called a non-grain raising stain (or NGR stain for short) and comes in a pre-mixed liquid form.

NGR stains use the same lightfast, transparent, and clear dyes as the water soluble aniline dyes but a special (and, according to the manufacturers, secret) solvent that won't raise the grain. I use Behlen's Solar Lux NGR stains and get excellent results (see Sources, p. 24).

So what's the problem? Why isn't everybody using NGR stains? There's one catch. The solvent dries quickly — not as fast as alcohol stains, but almost. So there remains the problem of lap marks. Once again, it's best to spray it on.

Behlen has recognized the problem of applying NGR stains with a brush or rag and has developed a retarder that slows the evaporation of the solvent. Adding Solar Lux Retarder (5-10%) slows down drying time and helps prevent lap marks.

I also apply Solar Lux very wet and keep a wet edge. If you're stingy, you'll get lap marks. If you do get a lap mark or accidently hit your cloth on an area already stained, try putting some alcohol on a clean cloth and go over the area to even out the marks.

PROBLEMS

The biggest problems that develop when I'm staining usually don't have anything to do with the stain. They have to do with the way the surface was prepared (see the article on Surface Preparation in *Woodsmith* No. 38).

Staining magnifies all the problems that should have been cleaned up earlier. If there's glue left on the surface, there will be sealed white spots after it's stained. If there are scratches, grain tear-out, dents, or mill marks, the pigments or dyes will settle down into these spots and color them darker than the rest of the surface.

SANDING. And if the wood is not sanded uniformly, the stain will soak in unevenly. A coarser grit sandpaper scratches the wood, opens up the cell walls, and creates whiskers that sop up extra stain. Stopping at 80 grit sandpaper, for example, and then staining will result in a much darker and scratched up surface than a surface that's been sanded up to 220-grit.

On the other hand, sanding too far — beyond 220 will burnish the surface and close off the grain. Stain won't soak in and the color will be light or blotchy.

END GRAIN. Another problem is end grain. Most of the time end grain is where you expect it (on the end of the board) and the dark appearance it takes on when it's stained is almost natural. But sometimes end grain turns up where you don't expect (or want) it. This happens on the beveled borders of raised panels, lathe turnings, or where grain switches direction.

Grain is rarely straight in a board. It usually rolls along like a gentle farm field. Occasionally it makes a sharp turn outward (such as a knot and the surrounding planer tear-out). All of a sudden you're working with end grain in the middle of a board. Stain soaks in unevenly and you get a blotchy appearance — pines, maples, and birches are notorious for this.

SEALING TO LIMIT PENETRATION. In these situations sealers such as McCloskey's Stain Controller and Wood Sealer can be brushed onto these areas before staining. But I usually just use a wash coat of dilute shellac — 1 part 3 lb. cut white shellac to 4 parts denatured alcohol.

If I suspect that the whole surface might be blotchy, I coat the entire surface with an *even* coat of shellac sealer. When it's dry, I'll scuff it with 220-grit sandpaper and then apply a coat of pigmented oil stain.

But if it's just end grain such as on the beveled borders of a raised panel, a careful application of sealer with an artist's brush on the selected areas is all that's needed.

SANDING TO LIMIT PENETRATION. Another solution to the problem is simply more thorough sanding. I've discovered that sanding about two grits further on end grain will result in a lighter color. For example, if I finish sand the project with 180-grit, I'll go back and sand the end grain with 200-grit and then 220-grit.

The finer sawdust clogs up the pores and the scratches are smaller and soak up less stain. It's usually just the right depth of color to match the rest of the project.

CONCLUSIONS

In choosing a stain, you need to decide if you want a uniformly colored surface that can be easily controlled, but without much depth (pigmented stains) . . . or some depth, and some uniformity (penetrating oil/dye stains like Minwax) . . . or a brilliant transparent surface that accents the grain but can be more difficult to control (aniline dyes and NGR stains).

Part of the fun of working with all of these stains is experimenting with mixing colors and concentrations and not relying on the standard pre-mixed colors.

But it's important to remember that stains are not finishes. They can't do it all. They're simply a means of changing the color or bringing out the grain. The wood is still subject to heat, moisture, and dirt and must be finished with a top coat.

SUMMARY

- **PIGMENTED OIL STAIN.** Ranges from heavy-bodied to thin and runny. Lies on the surface and tends to hide grain. Provides uniform color, but stir well to mix up pigments. Easy to apply. Slow drying. Wipe off to control color. Best for refinishing work and on light-colored woods with little grain (pine, maple). Watch for runs and drips. Colors can be mixed.
- **GELLED STAIN.** Pigments suspended in gel (usually about the consistency of jello). Pigments won't settle to bottom of can so you get consistent color throughout use. Very easy application, no drips or runs. Can be problems wiping out of moldings, corners. Difficult to mix colors.
- **LATEX STAIN.** Cloudy, heavy color with little penetration. Hides grain. No harsh chemicals. Easy water clean-up.
- **OIL SOLUBLE DYE.** Dye mixed in an oil-based solvent (lacquer thinner, mineral spirits). Transparent Minwax colors are one example. Also available in powdered form to make your own stains. Powder can be mixed with oil finishes and varnishes. Comes in a variety of colors. Good penetration. Easy application, but can run and drip.
- **WATER SOLUBLE DYE.** Most common of the powdered aniline dyes. Clear, transparent, permanent colors. Wide range of colors that can be easily mixed. Inexpensive. Will not bleed into top coat. No harmful chemicals or solvents needed. Requires the extra step of raising the grain before application. Insufficient penetration in pores of oak and ash.
- **ALCOHOL SOLUBLE DYE.** Powdered aniline dye that is mixed with methanol. Sometimes called "spirit stains." Won't raise the grain. Dries very quickly which makes it difficult to avoid lap marks unless it's applied with spray equipment. Doesn't penetrate very deep. Best for touch-up work.
- **NON GRAIN RAISING (NGR) STAIN.** Premixed aniline dye (similar to water dye) sold in liquid form that won't raise the grain. Easy to mix colors. Dries quickly, but retarder can be added for brush application to prevent lap marks.

Talking Shop

AN OPEN FORUM FOR COMMENTS AND QUESTIONS

WOODWORKING DUST

I enjoyed your article in Woodsmith *No. 38 on the fire hazard of sanding dust, and I agree with you that the best solution to this problem is to keep your shop as clean as possible. I always try to keep the dust in my shop within manageable levels, not only to prevent a fire hazard, but to reduce what I feel is an even more dangerous hazard — inhaling the sawdust on a regular basis.*

I have to admit I'm as guilty as anyone for not wearing a dust mask everytime I'm in the shop. But the one time I always make a point of wearing a dust mask is when it's time to sand. The dust gets as thick as smoke.

The masks I've found that work the best are called dust respirators and are approved by NIOSH (National Institute for Occupational Safety and Health).

These respirators are quite a bit different from the typical hardware store masks that leak more air (and dust) around the edges than through the filter. Not only do the respirators use thicker filters, but they also use a double strap system that creates an effective seal around the mask.

The only source I've been able to find for these masks are safety supply stores. (I found our local supplier by looking under Safety Equipment in the Yellow Pages).

Although they're good, they're also expensive. In our area, they're only available in boxes of 20, and cost about 90¢ per mask.

But if you're going to put up with wearing a dust mask in the first place, the least it can do is work.

Thomas Greenlee
St. Louis, Missouri

Editor's Note: After reading Mr. Greenlee's letter, we bought a box of the 3M home insulation dust respirators #8710, and were impressed with how well they work. They do cost more, but we feel they're worth it.

There's one other thing I'd like to mention about the safety hazards concerning sawdust. I know the obvious thing is that you're breathing in dust that may be harmful to your lungs. But there's another problem.

When I'm working on the saw or router table, I'm usually not so concerned about breathing the dust and harming my lungs. But I am concerned about breathing the dust and sneezing . . . especially when I'm right in the middle of a cut. That happened to me once. Now I wear a dust mask.

The same goes for a protective face mask. It's not so much the protection against the chip that might fly in my eye and cause damage. It's the chip that hits me on the cheek and causes me to flinch when I'm right in the middle of a cut.

WOOD MOVEMENT

Every time you use solid wood for a project, you have to be aware of wood movement — the expansion and contraction of wood during seasonal changes in humidity.

When the humidity is high, wood (even pieces finished with varnish or polyurethane) will absorb moisture from the air and expand. Then when the humidity is low (usually winter months) the wood will release moisture and contract.

How much does wood move? That's the big question. As a general rule of thumb you can count on kiln-dried wood (that has been dried down to about 7% moisture content) moving about ⅛" per 12" in width, or about 1% in a typical home environment.

Note: This is the shrinkage for kiln-dried wood. Air-dried lumber presents another problem. Air drying will usually only take the moisture content down to about 14% to 16%.

When it's brought indoors (especially during the winter), it will have much greater initial movement as it dries down to the level of most homes. Then it will begin it's seasonal movement cycles.

The best explanation I've seen on this is in Bruce Hoadley's book, *Understanding Wood.* (See Sources, page 24.)

Wood movement was a major consideration when we were designing the wall cupboard shown in this issue (see page 14). The back is made of 10 pieces of solid wood, each 3½" wide. Since each board is fastened to the shelves with screws centered on the width, we were concerned with the wood expanding and buckling the pieces at each joint.

We built this project in the summer, so the wood is already at it's widest on the expansion/contraction cycle. As we mounted the boards, we pushed them together with light pressure. However, if we had built this project in the winter, the boards should be laid out with gaps to allow for summertime expansion.

Using the 1% rule of thumb, there should be about a 1/32"-gap between each of 3½" wide board. The easiest way to gauge this gap is with playing cards. The combined thickness of three playing cards is within a few thousandths of 1/32".

As the boards are mounted, place three playing cards between the shoulders of each of the spline and groove joints. This should provide adequate spacing for the wood to swell during the humid summer months.

HOME BREW

The easiest way to get a pigmented oil stain is just to buy it. But sometimes I can't find the exact color I want. It's at these times I mix my own.

Mixing up a "home-brew" pigmented oil stain is not as difficult as it may sound. And it can be a lot cheaper than buying a dozen cans of various colors of stain to find the one you like.

When I first started experimenting with mixing my own stains, my greatest reservation was mixing the colors. I envisioned an artist's pallet with a dozen basic colors and mixing them to produce subtle variations until I found precisely the right color.

But it's not really like that. You're not starting with basic colors like red, yellow, or green. Japan colors and artists' oils come in shades that are already very close to many stain colors.

For example, burnt umber is very close to a fruitwood tone. Yellow ochre is a tannish yellow that will provide a light pine color. Burnt sienna is the reddish brown that comes close to many of the stains labeled mahogany or cherry. And Van Dyke is a dark walnut color.

By choosing one of these colors and then adding dabs of another color, it's relatively easy to obtain the shade you want. If you want to experiment, here's a formula that will produce about one pint of stain that is a medium brown color (somewhat similar to Minwax's Early American stain).

To make the stain, add 2 tablespoons of burnt umber Japan color to 1 cup of turpentine and mix thoroughly. Then add ½ cup boiled linseed oil and 1 tablespoon of varnish (not polyurethane). (The varnish serves as a binder, holding the pigments to the wood as the turpentine evaporates.)

Starting with this basic mixture, it's just a matter of experimenting to get the tone desired. This mixture can be lightened to a "fruitwood" color by using less burnt umber (1 tbsp. instead of 2 tbsp.), or darkened by adding a dab of Van Dyke.

You can even start with a different base mixture by using a different Japan color. If you want a walnut stain, start with Van Dyke. If you want a cherry stain, start with burnt sienna. Then just experiment to get the color you want.

Sources

SHARPENING FORSTNER BITS

You can order the India and Arkansas slip stones mentioned in the article from:

THE FINE TOOL SHOPS, INC., 20 Backus Avenue, Box 1262, Danbury, CT 06810; 800-243-1037 (Free catalog). *India stone*, medium, Order No. 500-1229, $4.95. *Arkansas stone*, super fine, Order No. 500-1230, $7.95. You can order both stones in a set, Order No. 500-1231, $10.95. Each stone measures 2¼" x ⅞" x 3/16".

You can order the Japanese water slip stones mentioned in the article from:

WOODLINE: THE JAPAN WOODWORKER, 1731 Clement Avenue, Alameda, CA 94501; (415) 521-1810 (Catalog: $1.50). *1000 Grit Japanese Water Slip*, Order No. 01.100, $4.95. *4000 Grit Japanese Water Slip*, Order No. 01.101, $5.95.

UMBRELLA STAND/PLANTER STAND

You can order the flexible veneer for the umbrella stand and the planter stand from the following source:

BOB MORGAN WOODWORKING SUPPLIES, 1123 Bardstown Road, Louisville, KY 40204; (502) 456-2545 (Catalog: $1.00). *Flexible Veneer*, flat cut, specify red oak or white oak (or see catalog for other species and prices); 24" x 48" (for umbrella stand), $17.85; 18" x 48" (for planter stand), $13.65.

WALL CUPBOARD

You can order the hardware for the wall cupboard from:

THE WOODWORKERS' STORE, 21801 Industrial Boulevard, Rogers, MN 55374; (612) 428-4101 (Note: $7.50 minimum cash order. Catalog: $2.00). *Hangers* (2), brass with 2 screws, Order No. D3008, $2.05 per 10. *Maple Knob* (4), 1¼" dia., unfinished with brass center top, Order No. E1730, $.85 each (Note: Knobs are in their separate "Kitchen Considerations" catalog).

You can order the panel-raising router bit for the drawer fronts from:

SEARS, ROEBUCK, AND CO., (1985/86 Tool Catalog). *Panel-raising bit*, carbide-tipped, Order No. 9HT-25465, $21.99.

STAINS

You can purchase many stains (Minwax, Duffy's, Homer Formsby's, Carver Tripp's, Deft, Ace Hardware, Sears, and others) at local hardware and paint stores. But many of the aniline dyes and non-grain raising (NGR) stains referred to on pp. 19-22 are difficult to find locally.

We order many of our finishing supplies from the following sources:

WOOD FINISHING SUPPLY CO., INC., 1267 Mary Drive, Macedon, NY 14502; (315) 986-4517 (Catalog: $2.50). Wood Finishing Supply has a complete line of Behlen stains and products including 15 Minute Wood Stains, Staintex Wood Toners, Gel-Stains, NGR Stains, aniline dyes, and Japan colors.

The specific products listed in our article on stains that are available from Wood Finishing Supply include (see catalog for colors):

Behlen's Gel Stain, $5.39 per pint, $8.68 per quart. *J. E. Moser's Golden Yellow Oak Oil Soluble Aniline Dye*, Order No. L1990, $3.00 per 1 oz., $7.52 per 4 oz., $12.64 per 8 oz. *Behlen's Solar Lux (NGR) Stains*, $5.39 per pint, $8.61 per quart, $21.91 per gallon. *Behlen's Solar Lux Retarder*, Order No. B500-00A25, $5.11 per pint. *Behlen's Japan Colors*, $6.38 per ½ pint, $15.00 per quart.

THE WOODWORKERS' STORE, (see address above). The Woodworkers' Store carries a complete line of Minwax products, Deft stains, water and alcohol soluble aniline dyes, Wood-Kote Gelled Stains, McCloskey Sealers, and other finishing products.

The specific products listed in our article that are available from The Woodworkers' Store include (see catalog for colors):

Minwax Wood Finish, $3.80 per ½ pint, $5.75 per pint, $8.25 per quart. *Deft Vinyl (Latex) Wood Stain*, $5.35 per pint, $8.25 per quart. *Wood-Kote Gelled Wood Stains*, $4.30 per 8 oz., $6.50 per pint, $9.95 per quart. *McCloskey's Stain Controller & Wood Sealer*, Order No. P1241, $5.75 per pint, $8.95 per quart, $23.95 per gallon.

WOODFINISHING ENTERPRISES, 1729 N. 68th St., Wauwatosa, WI 53213. WoodFinishing Enterprises is a very small company that has specialized in providing hard-to-obtain finishing products to woodworkers and musical instrument makers since 1980. We called Dale Przybyl, the owner, and found out that his business is currently a part time operation run out of his home. Therefore, he may be slow in processing orders and you have to be very patient when you order from him.

What does impress us about WoodFinishing Enterprises is his complete selection of hard-to-find finishing products (where else can you obtain alkanet root, cutch extract, yacca resin, and Dragon's blood?). Dale is a chemist and obtains his finishes from all over the world. He has a very complete selecton of aniline dyes (oil, water, and alcohol soluble), pigments, and Japan colors.

WoodFinishing Enterprises' catalog is interesting just to browse through. Dale will send it free of charge, but once again, be patient as it might take him awhile to find the time to send it out.

MINWAX COMPANY, INC., 102 Chestnut Ridge Plaza, Montvale, NJ 07645. Minwax has a toll-free phone number to call with questions about their products. It's 800-526-0495.

In Talking Shop, (page 23) we made reference to Japan colors and artists' oils. Japan colors are available from Wood Finishing Supply and WoodFinishing Enterprises. Artists' oils are available in toothpaste-style tubes (usually 1.25 fl. oz.) from art supply stores. Common brand names are Liquitex, Bellini, Grumbacher, and Windsor & Newton's. Prices range from $2 to $7, but earth colors (the siennas and umbers) are the least expensive.

GOOD BOOKS

In the article on staining we used a quotation from George Frank's book *Adventures in Wood Finishing*. The book isn't the most practical finishing book available, but it makes for great reading. Frank includes tips and stories from fifty years of wood finishing and it's one of those books that's just fun to sit down and read.

It's available in hardcover for $9.95 from The Taunton Press, 63 South Main Street, Box 355, Newtown, CT 06470; 800-243-7252.

In Talking Shop (page 23) we mentioned the book *Understanding Wood* by R. Bruce Hoadley. It's one of the most useful books we know of for information about wood technology (especially problems with moisture) and how it applies to designing and building projects.

It's also available in hardcover from The Taunton Press for $19.95.

WOODWORKING CLUBS

Here are some new additions to our list of woodworking clubs:

ARIZONA ASSOCIATION OF FINE WOODWORKERS. This group formed over two years ago to serve all woodworkers from novices to master craftsmen. Since that time they have grown to over 150 members. They hold bimonthly meetings and monthly demonstrations. If you are interested, contact Robert Swanson, President, P.O. Box 44264, Phoenix, AZ 85064-4264.

WOODBUTCHERS. Richard Wonderlich dropped by our office and told us about this club in southeastern Iowa. They have about fifty members and try to get together once a month. Their Christmas toy project last year was a big success. For more information contact Richard Wonderlich, Rte. 2, Mt Pleasant, IA 52641.